This .pdf document is bookmarked

Operating Instructions and Parts Manual
Electric Hoist
Models SS-1C, SS-3C and DS-3C

WALTER MEIER (Manufacturing) Inc.
427 New Sanford Road
LaVergne, Tennessee 37086
Ph.: 800-274-6848
www.jettools.com

Part No. M-121100
Revision D 10/2010
Copyright © 2010 Walter Meier (Manufacturing) Inc.

Warranty and Service

Walter Meier (Manufacturing) Inc., warrants every product it sells. If one of our tools needs service or repair, one of our Authorized Service Centers located throughout the United States can give you quick service. In most cases, any of these Walter Meier Authorized Service Centers can authorize warranty repair, assist you in obtaining parts, or perform routine maintenance and major repair on your JET® tools. For the name of an Authorized Service Center in your area call 1-800-274-6848.

MORE INFORMATION

Walter Meier is consistently adding new products to the line. For complete, up-to-date product information, check with your local Walter Meier distributor, or visit waltermeier.com.

WARRANTY

JET products carry a limited warranty which varies in duration based upon the product (MW = Metalworking, WW = Woodworking).

90 DAY WARRANTY	1 YEAR WARRANTY	2 YEAR WARRANTY	3 YEAR WARRANTY	5 YEAR WARRANTY	LIFE LIFETIME WARRANTY
Lathe Accessories Machine Accessories Mobile Bases Safety Equipment Specialty Items Vise Accessories	Air Tools-Contractor Air Tools-Industrial Air Tools-Light Industrial Lubrication	Body Repair Kits Bottle Jacks Cable Pullers Cold Saws Hoists-Air Hoists-Electric Metal forming Mill/Drills Milling Machines MW Bandsaws MW Drill Presses MW Finishing Equipment MW Lathes MW Precision Vises Palet Trucks Rigging Equip. Service Jacks Stackers Surface Grinders Tapping Trolleys-Air Trolleys-Electric Web Slings Winches-Electric	WW Benchtop Tools	Beam Clamps Chain Hoist-Manual Lever Hoists Pullers-JCH Models Scissor Lift Tables Screw Jacks Trolleys-Geared Trolleys-Plain Winches-Manual WW Air Filtration WW Bandsaws WW Buffers WW Drill Presses WW Dust Collectors WW Dust Filters WW Dust Fittings WW Jointers WW Lathes WW Planers WW Sanders WW Shapers WW Tablesaws	Fastening Tools Mechanics Hand Tools Striking Tools Vises (no -precision) Clamps

Warranty reverts to 1 Year Warranty if woodworking (WW) products listed above are used for industrial or educational purposes.

WHAT IS COVERED?

This warranty covers any defects in workmanship or materials subject to the exceptions stated below. Cutting tools, abrasives and other consumables are excluded from warranty coverage.

WHO IS COVERED?

This warranty covers only the initial purchaser of the product.

WHAT IS THE PERIOD OF COVERAGE?

The general JET warranty lasts for the time period specified in the product literature of each product.

WHAT IS NOT COVERED?

Five Year Warranties do not cover woodworking (WW) products used for commercial, industrial or educational purposes. Woodworking products with Five Year Warranties that are used for commercial, industrial or education purposes revert to a One Year Warranty. This warranty does not cover defects due directly or indirectly to misuse, abuse, negligence or accidents, normal wear-and-tear, improper repair or alterations, or lack of maintenance.

HOW TO GET SERVICE

The product or part must be returned for examination, postage prepaid, to a location designated by us. For the name of the location nearest you, please call 1-800-274-6848.

You must provide proof of initial purchase date and an explanation of the complaint must accompany the merchandise. If our inspection discloses a defect, we will repair or replace the product, or refund the purchase price, at our option. We will return the repaired product or replacement at our expense unless it is determined by us that there is no defect, or that the defect resulted from causes not within the scope of our warranty in which case we will, at your direction, dispose of or return the product. In the event you choose to have the product returned, you will be responsible for the shipping and handling costs of the return.

HOW STATE LAW APPLIES

This warranty gives you specific legal rights; you may also have other rights which vary from state to state.

LIMITATIONS ON THIS WARRANTY

WALTER MEIER (MANUFACTURING) INC., LIMITS ALL IMPLIED WARRANTIES TO THE PERIOD OF THE LIMITED WARRANTY FOR EACH PRODUCT. EXCEPT AS STATED HEREIN, ANY IMPLIED WARRANTIES OR MERCHANTABILITY AND FITNESS ARE EXCLUDED. SOME STATES DO NOT ALLOW LIMITATIONS ON HOW LONG THE IMPLIED WARRANTY LASTS, SO THE ABOVE LIMITATION MAY NOT APPLY TO YOU.

WALTER MEIER SHALL IN NO EVENT BE LIABLE FOR DEATH, INJURIES TO PERSONS OR PROPERTY, OR FOR INCIDENTAL, CONTINGENT, SPECIAL, OR CONSEQUENTIAL DAMAGES ARISING FROM THE USE OF OUR PRODUCTS. SOME STATES DO NOT ALLOW THE EXCLUSION OR LIMITATION OF INCIDENTAL OR CONSEQUENTIAL DAMAGES, SO THE ABOVE LIMITATION OR EXCLUSION MAY NOT APPLY TO YOU.

Walter Meier sells through distributors only. The specifications in Walter Meier catalogs are given as general information and are not binding. Members of Walter Meier reserve the right to effect at any time, without prior notice, those alterations to parts, fittings, and accessory equipment which they may deem necessary for any reason whatsoever. JET® branded products are not sold in Canada by Walter Meier.

Table of Contents

Warranty and Service 2
Table of Contents 3
Warning 4
Introduction 5
Description 5
Specifications – Single Phase 6
Specifications – Three Phase 7
Unpacking 8
  Contents of the Shipping Container 8
Installation 8
  Installing Top Hook 8
  Installing Power and Pendant Cords 8
  Electrical Instructions 9
  Installing Chain Container 11
Pre-Operation Inspection 11
  Inspecting the Load Chain 11
  Inspecting the Hooks 12
Operating the Hoist 12
Adjustments 13
  Safety Clutch Adjustment 13
  Replacing Load Chain 14
  Brake Adjustment 16
  Inspection Schedule A 17
  Inspection Schedule B 17
Inspection Procedures: Allowable Limits 18
  Load Chain 18
  Hooks (Top and Bottom) 18
  Brake Friction Pad 19
Chain Container Chart for Standard or Custom Lifts 19
Troubleshooting 20
Replacement Parts 21
  Power Cord Assembly 21
  Control Pendant Assembly 22
  1/2-Ton, 1-Ton and 2-Ton Chain Hoists 23
  Parts List: 1/2-Ton Chain Hoist 24
  Parts List: 1-Ton and 2-Ton Chain Hoists 27
  3-Ton Chain Hoist 30
  Parts List: 3-Ton Chain Hoist 31
  5-Ton Chain Hoist 34
  Parts List: 5-Ton Chain Hoist 35
  Hook Assemblies (1/2-Ton, 1-Ton and 2-Ton) 38
  Parts List: Hook Assemblies (1/2-Ton only) 39
  Parts List: Hook Assemblies (1-Ton only) 39
  Parts List: Hook Assemblies (2-Ton only) 40
  Hook Assemblies (3-Ton only) 41
  Parts List: Hook Assemblies (3-Ton only) 42
  Parts List: Hook Assemblies (5-Ton only) 43
  Parts List: Hook Assemblies (5-Ton only) 44
  Electrical Connections: Single Phase Only 45
  Electrical Connections: 3-Phase, Single Speed Only 46
  Electrical Connections: 3-Phase, Dual Speed Only 47

Warnings

1. Read and understand the entire owner's manual before attempting assembly or operation.
2. Read and understand the warnings posted on the machine and in this manual. Failure to comply with all of these warnings may cause serious injury.
3. Replace the warning labels if they become obscured or removed.
4. This chain hoist is designed and intended for use by properly trained and experienced personnel only. If you are not familiar with the proper and safe operation of a chain hoist, do not use until proper training and knowledge have been obtained.
5. Do not use this chain hoist for other than its intended use. If used for other purposes, Walter Meier (Manufacturing) Inc., disclaims any real or implied warranty and holds itself harmless from any injury that may result from that use.
6. Do not install this chain hoist where explosive hazards may exist.
7. Give your work undivided attention. Looking around, carrying on a conversation and "horse-play" are careless acts that can result in serious injury.
8. Do not use to lift people, or loads over people. Warn others in the vicinity when lifting or transporting a load. Avoid swinging load and hook.
9. Do not exceed the rated capacity of the chain hoist.
10. Make sure limit switches are operating properly. Do not use limit switches as routine operating stops; they are emergency devices only.
11. Do not use the load chain as a sling; this may cause damage to the chain.
12. Maintain firm footing when operating the hoist.
13. Always inspect the chain hoist for damage prior to use. Do not use a chain hoist with twisted, kinked, worn or otherwise damaged chain. If the chain hoist is damaged, do not use until it has been repaired or replaced.
14. Do not use more than one chain hoist to lift or move a load. If this is unavoidable, *each* chain hoist must have the same capacity as the load to be moved.
15. Never allow the load chain to "set" over sharp edges. All lifts must be made with straight chain that is free of obstacles.
16. Do not use a chain hoist unless load is centered between top and bottom hooks.
17. Protect load chain from weld splatter and other contaminants. Do not allow the hook or chain to be contacted by a live welding electrode.
18. Always take time to study the job to be performed and choose the safest method. Do not place yourself or other people in an unsafe position.
19. Leave all internal maintenance to a qualified Walter Meier service center.
20. Replace the chain with factory replacement chain only. Do not use any other type of chain.
21. Never use the chain hoist if either hook is stretched, deformed, or has a broken or missing safety latch. Always replace the safety latch and/or the hook before placing the chain hoist back into service.
22. Do not operate this hoist while tired or under the influence of drugs, alcohol or any medication.
23. Understand and follow all procedures as set forth in American National Standards titled "Performance Standard for Hand Chain Manually Operated Chain Hoists." ANSI/ASME HST-2M. This standard is available through the American Society of Mechanical Engineers, 345 East 47th St., NY, NY 10017.

Familiarize yourself with the following safety notices used in this manual:

⚠CAUTION This means that if precautions are not heeded, it may result in minor injury and/or possible machine damage.

⚠WARNING This means that if precautions are not heeded, it may result in serious injury or possibly even death.

Introduction

This manual is provided by Walter Meier (Manufacturing) Inc., covering the safe operation and maintenance procedures for a JET Electric Chain Hoist. This manual contains instructions on installation, safety precautions, general operating procedures, maintenance instructions and parts breakdown. This machine has been designed and constructed to provide years of trouble-free operation if used in accordance with instructions set forth in this manual. If there are any questions or comments, please contact either your local supplier or Walter Meier. Walter Meier can also be reached at our web site: www.waltermeier.com.

Description

JET electric chain hoist models SS-1C and SS-3C are available in a variety of voltages and lifting and traversing configurations. Model SS-1C features single lift speed, 115/230V 60Hz single-phase power requirement. Model SS-3C features single lift speed, 230/460V three-phase power requirement. DS-3C features dual lift speed, 230/460V 60Hz, three-phase power requirement.

All chain hoists are available in custom configurations to meet your specifications. Contact your dealer or Walter Meier for more information.

Record your purchase information here for quick reference:

Model No.:	Stock No.:	Serial No.:
Purchased From:		Date Purchased:
Date Installed:	Installer:	

Specifications – Single Phase

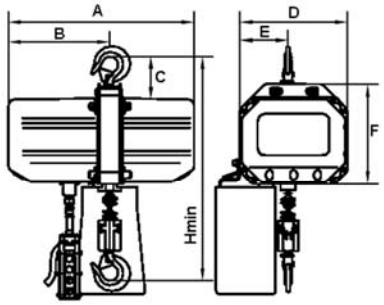

1/2SS-1C 1SS-1C

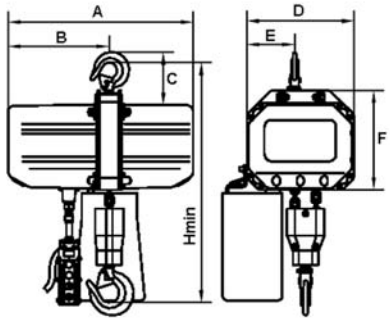

2SS-1C

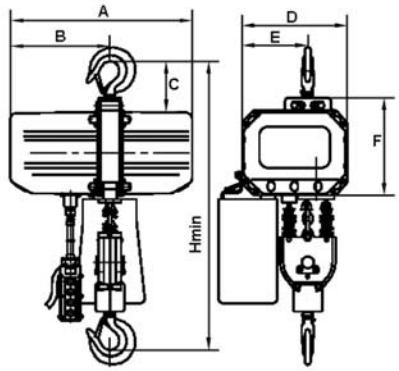

3SS-1C

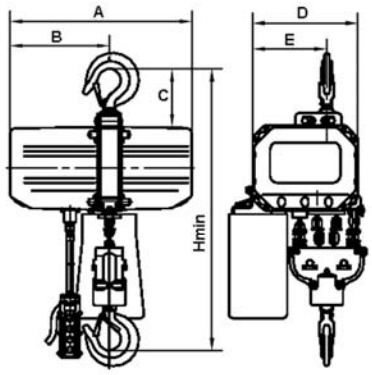

5SS-1C

Available in 10’, 15’ and 20’ lifts.

Model	Rated Cap’y (ton)	Hoisting Speed (f/min.)	Headroom (in.)	Motor	Duty Cycle Rating	No. of Falls	Load Chain (mm)	Net Wt. (lbs.)	A	B	C	D	E	F	Hmin.
1/2SS-1C	1/2	19.70	20.16	.87HP, 115/230 V 60Hz	25%	1	6.3x19	102.5	17.72	9.84	4.09	10.24	4.43	9.45	20.16
1SS-1C	1	19.70	24.41	1.74HP, 115/230 V 60Hz		1	8x24	149.91	20.43	11.16	4.67	11.81	5.28	10.96	24.41
2SS-1C	2	9.80	28.15			2		156.53			5.18		4.43		28.15
3SS-1C	3	6.60	31.5			3		213.85			5.71		6.38		31.50
5SS-1C	5	4.90	30.71			4		220.46			6.57		8.25		30.71

The above specifications were current at the time this manual was published, but because of our policy of continuous improvement, Walter Meier (Manufacturing) Inc., reserves the right to change specifications at any time and without prior notice, without incurring obligations.

Specifications – Three Phase

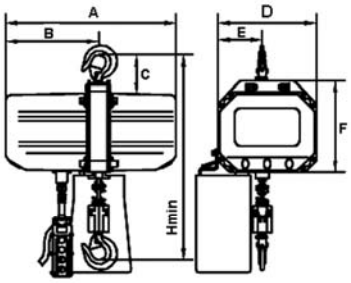

1/2SS-3C 1SS-3C
1/2DS-3C 1DS-3C

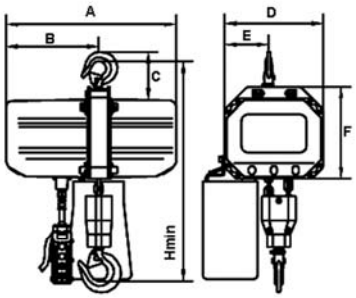

2SS-3C
2DS-3C

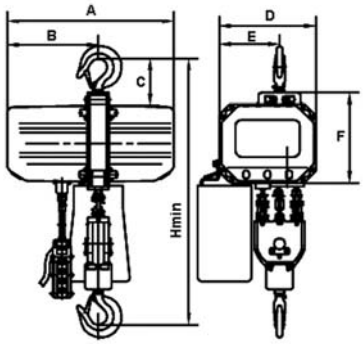

3SS-3C
3DS-3C

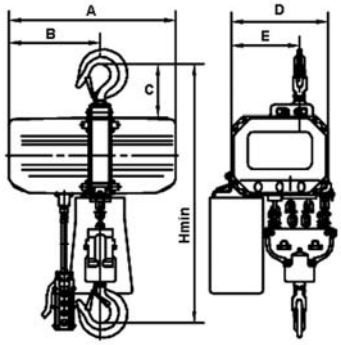

5SS-3C
5DS-3C

Available in 10', 15' and 20' lifts.

Model	Rated Cap'y (ton)	Hoisting Speed (f/min.)	Head-room (in.)	Motor	Duty Cycle Rating	No. of Falls	Load Chain (mm)	Net Wt. (lbs.)	A	B	C	D	E	F	Hmin.
1/2SS-3C	1/2	31.50	20.16	1.34HP 230/460V 60Hz	30%	1	6.3x19	102.5	17.72	9.84	4.09	10.24	4.43	9.45	20.16
1SS-3C	1	24.80	24.41	2.15HP 230/460V 60Hz		1	8x24	149.91	20.43	11.16	4.67	11.81	5.28	10.96	24.41
2SS-3C	2	12.40	28.15			2	8x24	156.53	20.43	11.16	5.18	11.81	4.43	10.96	28.15
3SS-3C	3	8.30	31.5			3	8x24	213.85	20.43	11.16	5.71	11.81	6.38	10.96	31.50
5SS-3C	5	6.20	30.71			4	8x24	220.46	20.43	11.16	6.57	11.81	8.25	10.96	30.71
1/2DS-3C	1/2	31.50/10.50	20.16	1.34/0.45HP 230/460V 60Hz	30% 15%	1	6.3x19	102.5	17.72	9.84	4.09	10.24	4.43	9.45	20.16
1DS-3C	1	24.80/8.30	24.41	2.15/0.71HP 230/460V 60Hz		1	8x24	149.91	20.43	11.16	4.67	11.81	5.28	10.96	24.41
2DS-3C	2	12.40/4.10	28.15			2	8x24	156.53	20.43	11.16	5.18	11.81	4.43	10.96	28.15
3DS-3C	3	8.30/2.80	31.5			3	8x24	213.85	20.43	11.16	5.71	11.81	6.38	10.96	31.50
5DS-3C	5	6.20/2.10	30.71			4	8x24	220.46	20.43	11.16	6.57	11.81	8.25	10.96	30.71

The above specifications were current at the time this manual was published, but because of our policy of continuous improvement, Walter Meier (Manufacturing) Inc.,reserves the right to change specifications at any time and without prior notice, without incurring obligations.

Unpacking

Open shipping container and check for shipping damage. Report any damage immediately to your distributor and shipping agent. Do not discard any shipping material until the Chain Hoist is installed and running properly.

Missing parts, if any, should be reported to your distributor. Read this owner's manual thoroughly for assembly, maintenance and safety instructions.

Contents of the Shipping Container

1 Electric Chain Hoist
1 Chain Container with Bracket and fasteners
1 Power Cord
1 Pendant Cord
1 Top Hook Assembly
1 Owner's Manual
1 Warranty Card

Installation

Support for the hoist may be hook, clevis pin, trolley, or beam clamp. Whatever method of suspension is chosen, the support components **must** be rated equal to, or greater than the capacity of the chain hoist. Supporting structures (such as I-Beams, etc.) should be installed by properly licensed professional installers.

Installing Top Hook

1. Remove the two screws, lock washers and flat washers (A, Figure 1), the hook-pin plates (B) and the hook pins (C).
2. Place the top hook assembly (D) into position between the body plates, and re-install pins, hook-pin plates, screws and washers. Firmly tighten the screws.
3. Place the hoist assembly into position on the supporting structure.

If you are using the hoist with a trolley, refer to the trolley manual for instructions on securing the pendant cord and maintaining proper slack in the cord during operation.

Installing Power and Pendant Cords

NOTE: If you need to convert the voltage requirements of the hoist, it will be more convenient to do that now before installing the power cord or pendant cord. See "Voltage Conversion" on page 9.

1. Attach the power cord and pendant cord to the cable holder, as follows.

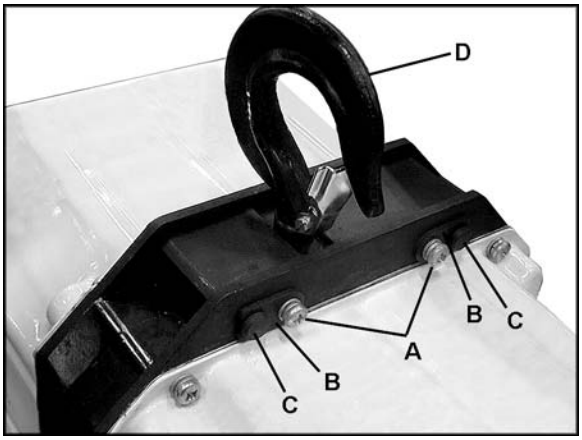

Figure 1

Figure 2

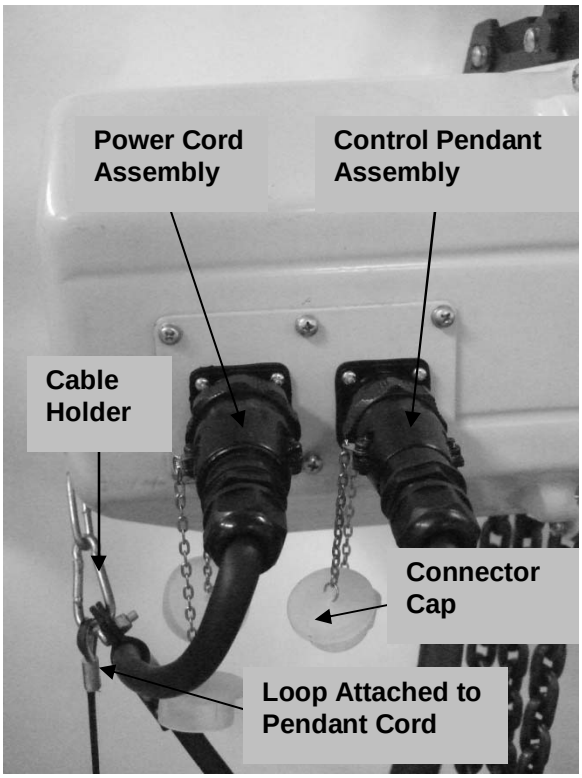

Figure 3

2. Open the connector caps on the two female connectors (Figure 2) and two male plugs (Figure 3).
3. Check orientation of notches on the female connectors and male plugs, and correctly insert the 4p plug into the 4p female connector on the left, insert the 7p plug into the 7p female connector on the right with sufficient force (see Figure 3).
4. Tighten the two cover nuts with fingers (see Figure 4).

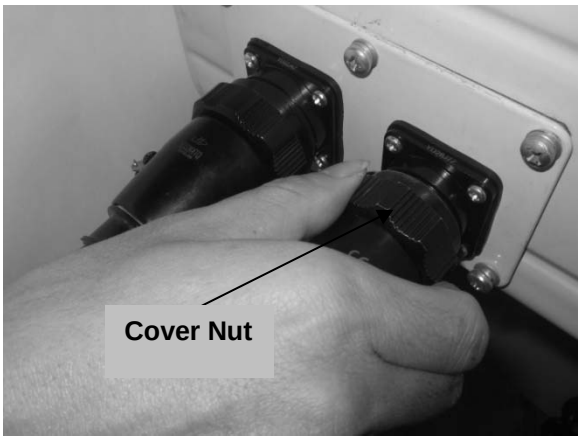

Figure 4

Electrical Instructions

WARNING Electrical connections must be made by a qualified electrician in compliance with all relevant codes. This machine must be properly grounded to help prevent electrical shock and possible fatal injury.

Grounding

In the event of a malfunction or breakdown, grounding provides a path of least resistance for electric current to reduce the risk of electric shock.

This machine's power cord must be fitted with an appropriate UL/CSA listed plug, or it can be "hard-wired" directly to a control panel. If hard-wired, make sure a disconnect is available for the operator.

If a plug is installed, it must have an equipment-grounding conductor and a grounding prong. The plug must be plugged into a matching outlet that is properly installed and grounded in accordance with all local codes and ordinances. Do not modify the plug – if it will not fit the outlet, have the proper outlet installed by a qualified electrician.

Improper connection of the equipment-grounding conductor can result in a risk of electric shock. The conductor with insulation having an outer surface that is green with or without yellow stripes is the equipment-grounding connector.

If repair or replacement of the electric cord or plug is necessary, do not connect the equipment-grounding conductor to a live terminal.

Check with a qualified electrician or service personnel if the grounding instructions are not completely understood, or if in doubt as to whether the tool is properly grounded.

Repair or replace damaged or worn cord immediately.

Voltage Conversion

The **single phase model SS-1C** is designed for 115 volt or 230 volt operation. It is pre-wired for 230 volt. To switch voltage:

1. Disconnect hoist from power supply, and unplug the power cord and pendant cord from the hoist.
2. Remove the motor cover and move the plug from the 230Vsocket to the 115V socket.
3. Re-install the motor cover.

The **three phase models SS-3C and DS-3C** are designed for 230 volt or 460 volt operation. They are pre-wired for 460V. To change to 230V proceed as follows. (Figure 5 shows a single speed model for reference).

1. Disconnect hoist from power supply, and unplug the power cord and pendant cord from the hoist.
2. Remove the motor cover and make the following exchanges:

   Model SS-3C: Move the plug XP1 from socket XS2 to XS1. Move the plug XP2 from socket XS6 to XS5.

   Model DS-3C: Move plug XP1 from socket XS2 to XS1. Move plug XP2 from socket XS6 to XS5. And move plug XP3 from socket XS4 to XS3.
3. On the phase protector, slide the switch S1 from the 460 volt position to the 230 volt position.
4. Re-install motor cover.

Refer to the diagrams at the back of this manual for any clarification of these procedures.

NOTE: When connecting plug to socket, check that the connector notch is fully engaged. To remove a plug, press on the notch tail to disengage notch.

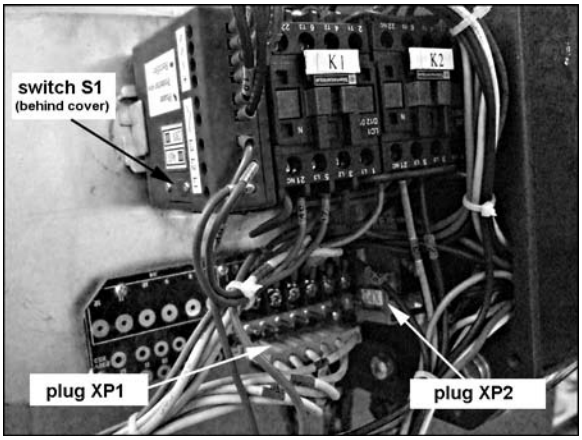

Figure 5
(single speed model shown)

Inspecting Hoist Motion

1. Before closing the circuit breaker and testing the hoist, check that wiring has been complete. If the hoist cannot be observed when the circuit breaker is closed, station an observer within sight of the hoist to report any movement when power is applied to the hoist. Be prepared to disconnect power if hoist motor starts when the power is applied. The hoist must remain motionless when power is applied. Find and correct any problems before continuing.

2. With no load on the load hook, press the UP button very briefly and observe hoist action. The hook should move upward. [Two speed models (DS-3C) have a two-position UP button. Press the button only part way to operate lift motor at slow speed, press fully to operate at high speed.]

3. If no motion occurs when the UP button is pressed and the hoist is connected to a three phase power supply, the power supply wires are incorrectly positioned. Switch any two of the three supply wires *at the power source.* **Do not attempt to rewire the hoist circuit or pendant controls for this problem.** Use the same safety precautions when reversing two of the supply wires as was used when the wires were originally connected.

4. Re-connect power and test hoist movement again without load. Run hoist to the complete lifting height to ensure limit switches are operating properly.

Extension Cords

If an extension cord is necessary, make sure the cord rating is suitable for the amperage listed on the hoist's motor plate. An undersize cord will cause a drop in line voltage resulting in loss of power and overheating.

The chart in Figure 6 shows the correct size cord to use based on cord length and motor plate amp rating. If in doubt, use the next heavier gauge. The smaller the gauge number, the heavier the cord.

Recommended Gauges (AWG) of Extension Cords

	Extension Cord Length *					
Amps	25 feet	50 feet	75 feet	100 feet	150 feet	200 feet
< 5	16	16	16	14	12	12
5 to 8	16	16	14	12	10	NR
8 to 12	14	14	12	10	NR	NR
12 to 15	12	12	10	10	NR	NR
15 to 20	10	10	10	NR	NR	NR
21 to 30	10	NR	NR	NR	NR	NR

*based on limiting the line voltage drop to 5V at 150% of the rated amperes.
NR: Not Recommended.

Figure 6

Installing Chain Container

Your hoist is supplied with a canvas chain container (Figure 7) designed to fit the particular length of chain. If a different length chain is ever installed on this hoist, the chain container must be replaced by one of proper size. See chart on page 19.

⚠WARNING Do not overfill chain container. If chain should overfill and begin to fall, the entire chain container may empty without warning, resulting in serious personal injury or property damage.

To assemble the chain container to the hoist:

1. Hang hoist in position on the I-Beam or trolley. Do not install chain container yet. Allow slack side and load side of chain to hang freely from hoist.
2. Apply power to the hoist and press the DOWN button until the lower limit switch is tripped.
3. Check the chain container to ensure that the seam is inside the bag. The bag must not be inside out. The forks of the bracket are inserted into the slots in the bag, which is then secured by closing the two self-adhesive flaps (see Figure 7).
4. Remove the screw and washer holding the end chain to the hoist (Figure 8). Mount the bracket of the chain container in that location as shown in Figure 9.
5. Put the chain stop into the container (Figure 8), and operate the hoist to bring the load hook up until the upper limit switch is tripped.
6. Check the chain to ensure that all the non-loaded chain is completely in the container.

⚠CAUTION Do not put chain into the chain container by hand! By not following the above steps, the chain can become twisted or kinked and can damage the hoist.

Pre-Operation Inspection

Inspecting the Load Chain

Clean the chain with a solvent, and carefully inspect the entire load chain. Replace damaged chain before using the chain hoist. See *"Inspection Procedures: Allowable Limits"* on page 18 for the maximum pitch allowed for chain length. If the chain exceeds this amount, it must be replaced.

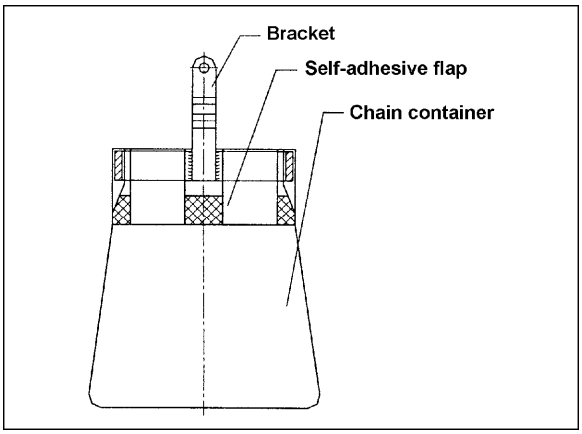

Figure 7

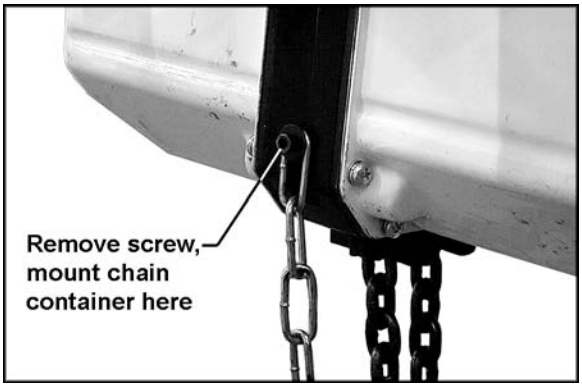

Figure 8

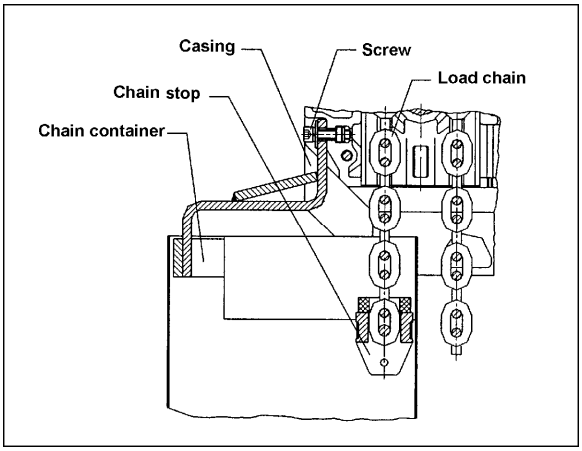

Figure 9

Also replace the load chain if any of the following are identified:

1. Seriously rusted or cracked.
2. Marks on the chain surface are deeper than 5% of the link's diameter.
3. Links are twisted or deformed.
4. The links are stretched too long or seriously worn on the surface, especially at the points where links contact each other.

Never extend load chain by welding a second piece to the original.

⚠WARNING Do not operate the hoist with a twisted, kinked or damaged load chain. Do not splice the load chain.

Check that the chain does not twist along its length from hoist to hook. If twist is present on units with multiple falls, the hook must be passed back through the chain loop to remove all twist in the chain.

⚠WARNING The load chain supplied with your JET chain hoist is designed, manufactured, and tested for proper fit and durability. Over a period of time, the chain may need to be replaced. For your own safety, use factory replacement chain only. Use of other than factory replacement chain may cause serious injury and/or damage to the hoist.

A light coat of 30-weight oil applied periodically to the chain will create easier operation and prolong the life of the chain.

Inspecting the Hooks

It is important to check top and bottom hooks for proper opening and other signs of deformation or damage. Replace a hook immediately if any of the following problems are identified:

1. The safety latch no longer contacts the hook opening.
2. The vertical angle at the neck of the hook reaches 10° (see Figure 10).

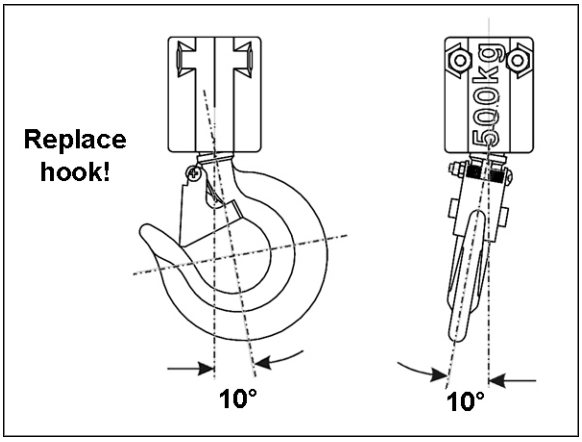

Figure 10

3. Chemical corrosion or cracks on the hook.
4. Excessive wear on the inside surface.
5. The throat opening has enlarged. (See page 18 for the maximum allowable limits for the throat opening.)

NOTE: Excessive hook throat opening or twist indicates abuse or overloading of the hoist. If such deformation is discovered, inspect hoist, chain and all supporting members very carefully for additional indications of excessive hoist loading.

⚠WARNING Do not attempt repair of a hook by heat treating, bending or attaching anything by welding. Such procedures will weaken and may cause failure of the hook.

Operating the Hoist

Allow the hoist to come to a full stop before changing direction. Rapidly reversing or catching a falling load can overload the hoist system and cause a failure in the hoist and/or chain, resulting in injury or property damage.

If the hoist is connected to a manual trolley, move the hoist by pushing on the suspended load. Move an unloaded hoist by pulling on the empty hook. Do **NOT** move the hoist by pulling on the pendant cord.

The brake mechanism must be kept clean and free from dirt, water, and oil. Never allow oil to penetrate the brake mechanism. Always keep your hoist clean, and store in a clean, dry location.

Follow this general procedure for hoisting loads:

1. Secure the upper hook to the supporting structure.
2. Place load sling or chain in the center of the bottom hook, making sure the safety latch is secure. **Never load the hook in front of the safety latch.** See Figure 11.

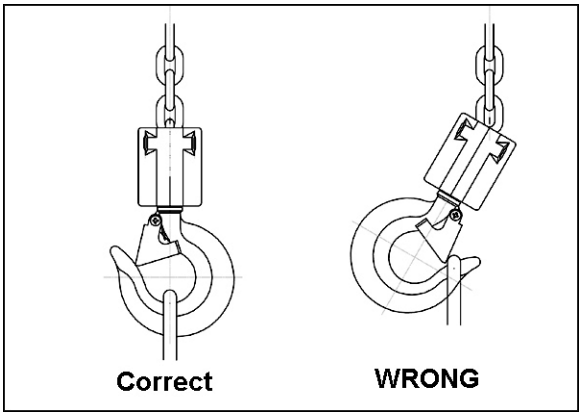

Figure 11

3. Avoid lifting one load with two hoists. If this is unavoidable, apply equal weight to both hoists and use hoists with the proper lift capacity. **Capacity of *each* hoist must be equal to the total load to be lifted.**
4. Press UP button and remove all slack in load chain. Increase tension in the load chain until the hoist is about to raise the load.

5. Check again that the load is properly slung, directly under hoist, and will not suddenly swing or twist.
6. Raise load an inch or two above the ground and stop. Observe load for a few moments, looking for signs that the load or hoist system is unstable, or other indications that there is a problem.
7. Check that the chain is not twisted at the bottom hook. All welds should face the same direction (see Figure 15). For hoists with two or more falls of chain, make sure the bottom hook is not turned over. This may cause the chain to twist.
8. Raise load to the traveling height. Raise only to the height necessary to safely clear all obstacles.
9. Lower load at destination. If both UP and DOWN commands must be used during lowering, pause for a moment between each reversal of load direction.
10. Slowly allow weight to shift from hoist to ground or new support. Do not approach load until all tension is out of chain and load is stable.

Adjustments

Safety Clutch Adjustment

The load limitation of the safety clutch has been set to within 1.3 to 1.8 times the rated load of the hoist. Generally, the safety clutch will not require adjustment. But if the hoist ever fails to lift the rated load while the rotor is turning, the safety clutch must be re-adjusted. Proceed as follows (see Figure 12):

1. Suspend the rated load in the bottom hook.
2. Push the UP button to create tension on the load chain, but do not raise the load off the ground.
3. Disconnect the power source, and remove the gear side cover.
4. Loosen the screw (G), open the plate (J), and push down the adjusting shaft (K) until it fully engages the adjusting circle nut (L). Rotate the nut (H) clockwise to tighten the adjusting circle nut (L).
5. Pull the adjusting shaft (K) out of engagement with the adjusting circle nut (L). Then close the plate (J) and tighten screw (G).
6. Connect hoist to power source, and push the UP button on the pendant control. The hoist should now lift the rated load. If it will not lift the load, disconnect power and repeat steps 4 and 5 to tighten the adjusting circle nut until it can lift the rated load.
7. Now change the load to within 1.3 to 1.8 times the rated load, then push the UP button. The hoist should NOT be able to lift the load. If it can lift the load, repeat steps 4 and 5, rotate the adjusting nut (H) and loosen adjusting circle nut (L) until the hoist cannot lift the load.
8. Unload the hoist and repeat step 6 with the original rated load. The hoist should now be able to lift the original rated load. If it does not, repeat steps 6 and 7 until the hoist operates with the rated load only, but not with the 1.3 to 1.8 times rated load.
9. Unload the hoist, and re-install the gear side cover.

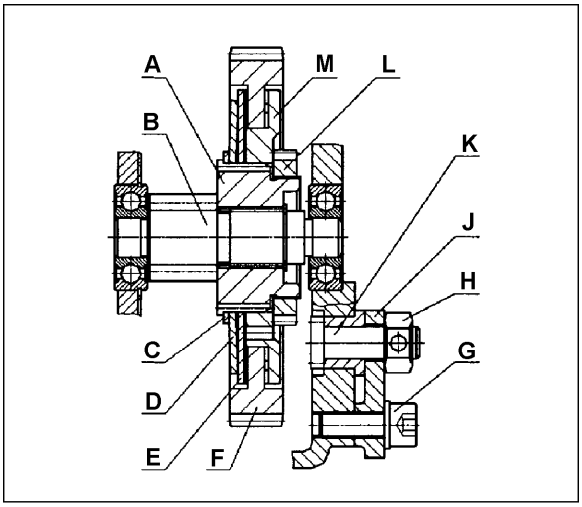

A - Spline hub
B - First stage pinion
C - Adjusting washer
D - Dish spring
E - Clutch friction
F - First stage gear
G - Screw
H - Adjusting nut
J - Adjusting plate
K - Adjusting shaft
L - Adjusting circle nut
M - Clutch carrier

Figure 12

Replacing Load Chain

Over time, the load chain will wear or elongate. This can cause damage to the hoist, breakage, or non-engagement of the load sheave. The following procedures describe replacing the load chain for single and multiple fall hoists. **These procedures should be performed by experienced personnel only.**

How to Cut Chains

Use a bolt cutter with special cutter jaws for cutting hardened chain. Cut only one side of the link at a time. When making the second cut, place a mat over the chain to catch the flying chain section.

Making a C-Link

Replacing load chain will require the use of a C-link (in some cases, two C-links), which you can easily make as follows:

1. Cut a link from the old chain.
2. Cut the weld from the link leaving an opening approximately 1.25 times the diameter of the link material. See Figure 13.
3. Grind the cut areas smooth and remove all burrs.

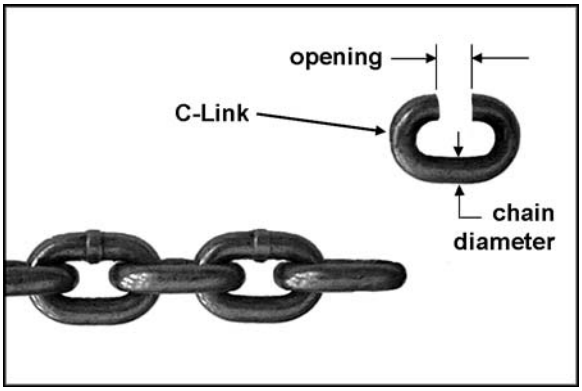

Figure 13

Single Fall Chain Hoist

1. Lower the load hook until only 1 to 2 feet of slack chain remains in the chain container.
2. Remove chain container.
3. On the slack side of the chain, remove the chain stop and the spring (Figure 14). Keep these handy for later re-installing.
4. Using a C-link, connect the new chain to the old chain. Be sure vertical link welds face away from load sprocket (see Figure 15).
5. Keep tension on both sides of the chain and lower the load hook to pull the new chain through the hoist. Do not let the chain twist or bind as it is being pulled through the hoist.

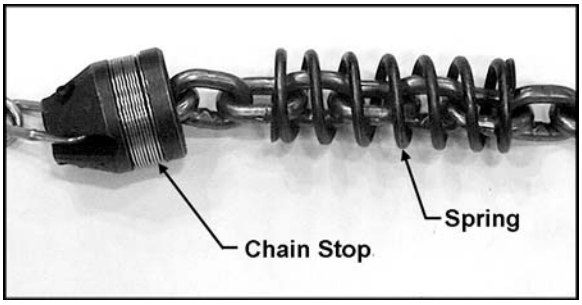

Figure 14

6. Stop hoist when 1 to 2 feet of new chain remains on the slack side.
7. Install the spring and chain stop on the slack end of the chain.
8. Remove the load hook and the spring from the old chain, and install them on the new chain. Inspect condition of both spring and hook.
9. Lower load hook until the limit switch stops hoist movement. Inspect the chain for any signs of twist.
10. Install chain container following the instructions in this manual. Do not fill chain container by hand.
11. It is recommended that after installing new chain, the first few lifts be limited to no more than 25-50% of the rated load. Thoroughly Inspect chain for twist before placing hoist in routine service.

Vertical and Horizontal Links

Vertical and horizontal are determined from the relationship with the load sprocket. Vertical links will be guided by the center slit in the load sprocket. Horizontal links will engage in the oval pockets on the sprocket. See Figure 15.

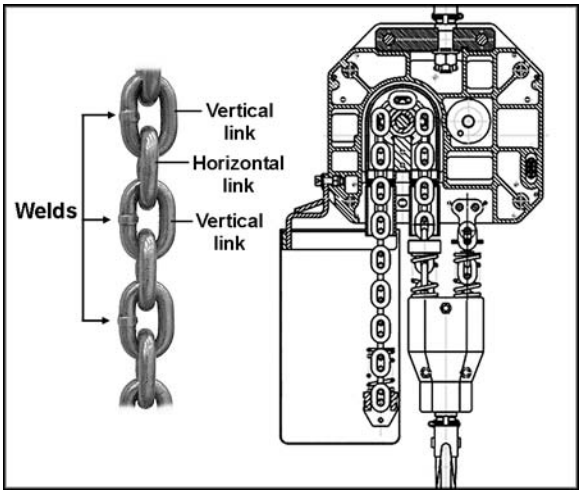

Figure 15

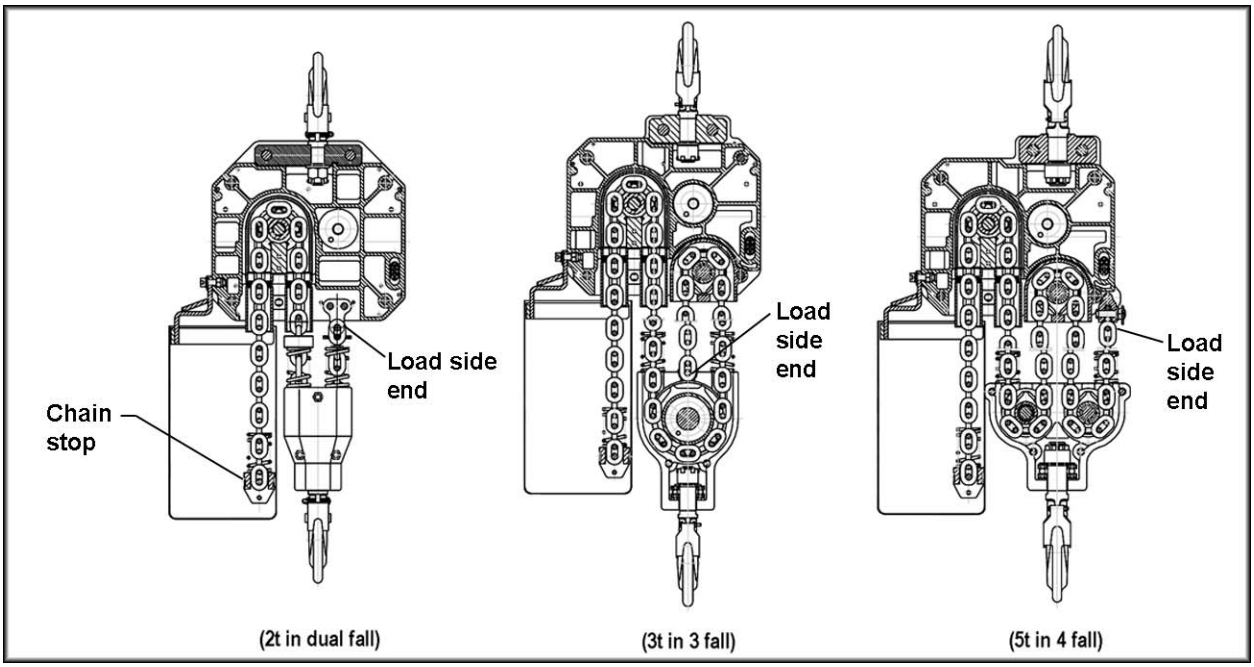

Figure 16

Dual/Multiple Fall Chain Hoists

⚠CAUTION The link on the load side end must be a vertical link. If it is a horizontal link, the chain will have a twist in it.

1. Lower hook until only 1 to 2 feet of slack chain remains in the chain container.
2. Remove chain container.
3. On the slack side of the chain, remove the chain stop, and remove the black spring(s). (see Figure 14). Keep these handy for later re-installing.
4. Using a C-link(s), connect the new chain to the old chain. If the end link of the old chain is horizontal, use two C-links. If the end link of the old chain is vertical, use one C-link See Figure 17. Using the correct number of C-links will properly orient the chain, and ensure that the first link on the load side end is a vertical link.
5. Install the spring(s) and chain stop on the opposite end of the new chain.
6. Support the load hook so that the load chain can pass through the chain sheaves smoothly. Figure 16 shows the load chain path for the various sizes of hoist.
7. Press the DOWN button to move the chain through the hoist. Keep tension on the chain as you pull it through to the load side, until the C-link(s) clears the hoist at the load side.

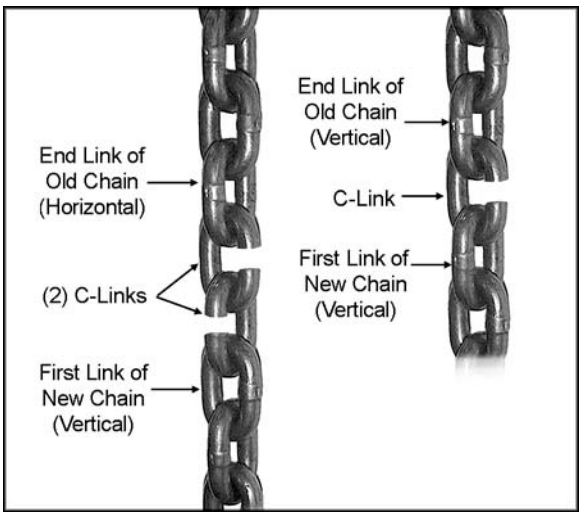

Figure 17

8. Place the first link of the new chain into the load side end holder. Be sure that there is no twisting of chain between last chain sprocket and load side end holder.
9. Remove the chain stop bolt from the old chain and install on the new chain. **Do not substitute any other bolt in this application.** Use a new cotter pin to secure bolt.
10. Install chain container following instructions in this manual. Do not fill chain container by hand.
11. Lower hook until limit switch stops hoist movement, then raise hook until limit switch stops hoist movement. Inspect chain for any signs of twist and correct before continuing.

12. It is recommended that the first few lifts be limited to no more than 25-50% of the rated load. Inspect chain for twist before placing hoist into routine service.

Brake Adjustment

The normal gap between the armature and the iron core is from 0.5mm to 1.0mm. If the gap is out of the range of 0.5mm to 1.0mm, it must be adjusted as follows (see Figure 18):

1. Disconnect hoist from power source.
2. Remove the gear side cover.
3. Remove the locking plate (H) by unscrewing the four screws (J).
4. Insert a 0.5mm spacer between the iron core (K) and the armature (B).
5. Tighten the four nuts (G) by an equal amount one by one. The gap is now adjusted to 0.5mm.
6. Release the four nuts (G) by 1/6 of a turn and remove the spacer. Re-tighten each of the nuts by 1/6 of a turn.
7. Re-position the locking plate (H) and install the four screws (J).
8. Re-install gear side cover.

NOTE: When adjusting the brake, if the brake pad is found deformed, the glue has failed, or the lining is severely worn, the brake pad should be replaced. See page 19.

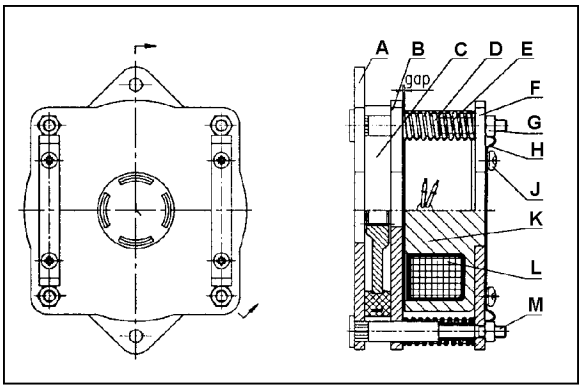

A - Base plate
B - Armature
C - Brake pad
D - Brake spring
E - Location spring
F - Iron core locating board
G - Nut
H - Locking plate
J - Screw
K - Iron core
L - Brake coil
M - Brake screw

Figure 18

Inspection and Maintenance

⚠WARNING All repairs and adjustments are to be performed by trained and experienced personnel using procedures that are approved for the hoist system being serviced. All safety-related deficiencies discovered in the inspection are to be corrected before hoist is placed back in service. Check for internal damage whenever external damage has occurred.

Read and follow the ANSI Inspection and Maintenance instructions. Know the meaning of Frequent Inspection, Periodic Inspection, Normal Service, Heavy Service, and Severe Service. It is the customer's responsibility to understand and follow all ANSI and JET inspection and maintenance instructions.

The following items are to be inspected by appointed personnel at the time interval noted below. Dated inspection and repair reports must be maintained. Copies of all reports must be available to service personnel.

Inspection Schedule A

Service Interval:

Normal Service – Monthly
Heavy Service – Weekly to Monthly
Severe Service – Daily to Weekly

1. Check brake for slippage.
2. Check that pushbutton controls operate properly.
3. Check that limit switches function properly. Without load, operate up button control while observing stopper spring. If stopper spring becomes compressed and motor does not stop, STOP operation immediately. Limit switch is not operating properly. Repeat test with down button control.
4. Check top hook and load hook for deformation, chemical damage, and cracks.
5. Check that load chain is clean and lightly lubricated, free of excessive wear or deformation at the contact points between links and link and hook. This hoist uses special alloy hoisting chain and does not interchange with any other manufacturer. All replacement chain must be purchased from your JET distributor or from Walter Meier (Manufacturing) Inc., directly by calling 800-274-6848.
6. Check that the chain passes through all sprockets smoothly while under load.
7. Check entire hoist system for signs of damage and loss of integrity.

Inspection Schedule B

Service Interval:

Normal Service – Yearly
Heavy Service – Semi-Annually
Severe Service – Quarterly

1. Do all of the Schedule A items.
2. Check entire unit for loose screws, bolts, nuts and pins.
3. Check for evidence of excessive wear, corrosion, cracks, or distortion in the following parts: hook parts, chain attachments, suspension bolts and shafts, gears, bearings, pins, rollers, and locking and clamping devices.
4. Check for evidence of damage to hook parts including hook retaining nuts and collars and pins and hook holding frame and parts used to secure the frame.
5. Check for evidence of damage or excessive wear of load gear, sheave and sprocket wheel. If the pockets are too deep, the chain may jam with corresponding failure of engagement between chain and sprocket or sheave.
6. Check for evidence of excessive load brake wear. Inspect clearance between brake components, and adjust if needed.
7. Check for evidence of pitting or other deterioration of visible controller contacts.
8. Check for evidence of deterioration of supporting structures and trolleys.
9. Check for visible deformation of limit switch coil springs.
10. Check that all warning labels are present and readable.

Inspection Procedures: Allowable Limits

Load Chain

Carefully inspect the entire load chain. Measure five consecutive links with calipers in the manner shown in Figure 19. Check every three feet and especially where excessive wear is indicated. Any load chain that shows noticeable deformation or heat influence must be replaced with a new one. Never extend load chain by welding a second piece to the original.

Capacity	Load Chain	5 Links Normal	5 Links Limit
1/2 ton	6.3x19mm	3.74”	3.8”
1 ton	8x24mm	4.72”	4.79”
2 ton	8x24mm	4.72”	4.79”
3 ton	8x24mm	4.72”	4.79”
5 ton	8x24mm	4.72”	4.79”

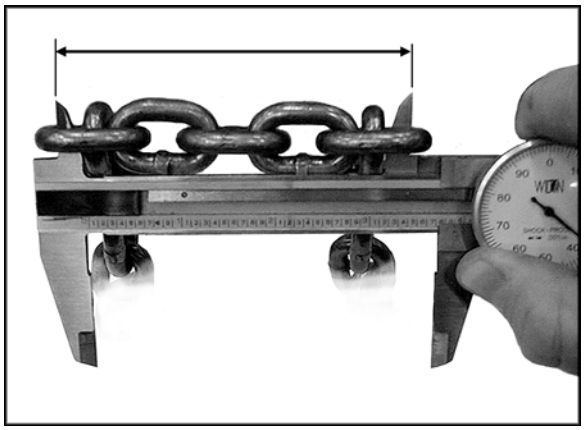

Figure 19

Hooks (Top and Bottom)

Replace the hook when the “A” or “B” measurement, as shown in Figure 20, reaches the limit shown in the tables below. Never heat treat the hook or attach anything to the hook by welding.

NOTE: Excessive hook throat opening or twist indicates abuse or overloading of the hoist. If such deformation is discovered, inspect the hoist, chain and all supporting members very carefully for additional indications of excessive hoist loading.

Throat – “A”

Capacity	A – Normal	A – Limit
1/2 ton	1.26”	1.386”
1 ton	1.42”	1.562”
2 ton	1.73”	1.903”
3 ton	1.73”	1.903”
5 ton	1.97”	2.167”

Seat – “B”

Capacity	B – Normal	B – Limit
1/2 ton	1”	under 0.9”
1 ton	1.15”	under 1.035”
2 ton	1.56”	under 1.404”
3 ton	1.56”	under 1.404”
5 ton	1.78”	under 1.602”

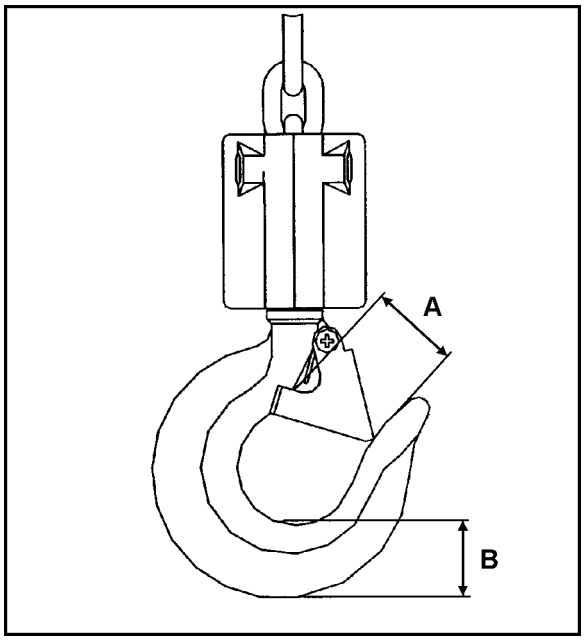

Figure 20

Brake Friction Pad

See Figure 21.

Before suspecting or replacing the brake friction pad, make sure the brake and the safety clutch have both been adjusted properly according to the instructions on pages 13 and 16.

If the friction pad is suspect, measure its thickness using a calipers. If it is under the thickness limit, replace it according to the chart below.

Capacity	Thickness Normal	Thickness Limit (replace)
1/2 ton	0.51”	under 0.48”
1 ton	0.59”	under 0.55”
2 ton		
3 ton		
5 ton		

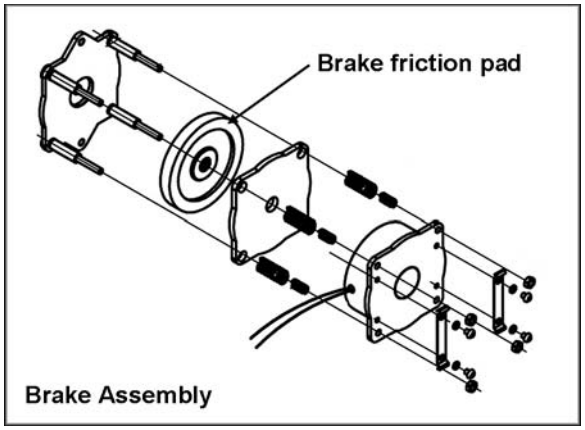

Figure 21

⚠WARNING Do not attempt to rebuild a worn friction pad and do not modify brake system in order to use a worn-out pad.

Chain Container Chart for Standard or Custom Lifts

Description	Hoist Model	Lift (m/ft)																	
		3m (10ft)	4m (13ft)	5m (16ft)	6m (20ft)	7m (23ft)	8m (26ft)	9m (30ft)	10m (33ft)	11m (36ft)	12m (40ft)	13m (43ft)	14m (46ft)	15m (49ft)	16m (53ft)	17m (56ft)	18m (59ft)	19m (63ft)	20m (66ft)
1/2t in single and three phase	1/2SS-1C 1/2SS-3C 1/2DS-3C	A	A	A	A	A	A	A	A	A	A	C	C	C	C	C	C	C	C
1t in single and three phase	1SS-1C 1SS-3C 1DS-3C	B	B	B	B	B	B	B	B	B	B	D	D	D	D	D	D	D	D
2t in single and three phase	2SS-1C 2SS-3C 2DS-3C	B	B	B	B	D	D	D	D	D	D	E	E	E	E	-	-	-	-
3t in single and three phase	3SS-1C 3SS-3C 3DS-3C	B	B	D	D	D	D	E	E	-	-	-	-	-	-	-	-	-	-
5t in single and three phase	3SS-1C 3SS-3C 3DS-3C	B	D	D	D	E	E	-	-	-	-	-	-	-	-	-	-	-	-

A = Chain Container part no. 1/2SS-3C-068
B = Chain Container part no. 1SS-3C-068
C = Chain Container (special order)
D = Chain Container part no. 3SS-3C-068
E = Chain Container (special order)

Troubleshooting

Trouble	Probable Cause	Remedy
Motor will not run.	No incoming power, or low voltage.	Check hoist connections to power source. If low voltage, have certified electrician check incoming power.
	Fuse blown or circuit breaker tripped.	Replace fuse/re-set circuit breaker.
	Rectifier damaged in the phase protector so that the brake won't work.	Replace phase protector.
	Transformer damaged.	Replace transformer.
	Motor damaged.	Have motor replaced by a qualified service technician.
Hoist lifts but will not lower.	Broken conductor in pendant cord.	Test continuity of each conductor. Replace cable if needed.
	Up/down switch malfunctioning.	Repair or replace switch.
Hoist lowers but will not lift.	Overloaded.	Reduce load to within hoist capacity.
	Up/down switch malfunctioning.	Repair or replace switch.
	Clutch malfunction.	Have clutch replaced by qualified personnel.
Load continues drifting down excessively when hoist is stopped.	Grease or oil on the lining.	Open the hoist, disassemble the brake and clean the lining.
	Disc brake is worn.	Adjust clearance between armature and iron core. See page 16.
	Brake springs are damaged.	Replace brake springs.
Hoist moves in wrong direction.	Two of the three power supply wires are switched.	Switch any two of the three supply wires (see page 10).
Motor overheats.	Excessive load or too frequent use.	Operate within rated load and according to duty cycle rating.
	Brake drags.	Adjust brake clearance (see page 16).
Poor engagement of chain with sprocket/sheave.	Load chain seriously worn.	Replace load chain. See pages 14 and 15 .
	Sprocket wheel, sheave or the chain guide is seriously worn.	Replace parts as needed.
Will not lift rated load.	Overload limit clutch friction torque too low.	Readjust the overload clutch to proper limits (qualified personnel only).
	Overload limit clutch damaged.	Replace overload limit clutch.
Limit switch failure.	Bad connection of limit switch leads.	Inspect the contacts of the leads and limit switches.
	Limit switch damaged.	Replace limit switch.

Replacement Parts

Replacement parts are listed on the following pages. To order parts or reach our service department, call 1-800-274-6848 Monday through Friday (see our website for business hours, www.jettools.com). Having the Model Number and Serial Number of your machine available when you call will allow us to serve you quickly and accurately.

Power Cord Assembly

Index No.	Part No.	Description	Size	Qty
106	1/2SS-3C-106	Cord Holder Assembly		1
123	1/2SS-3C-123UG	Male Plug	4P	1
124	1/2SS-1C-124	Power Cord for 1 Phase		1
	1/2SS-3C-124	Power Cord for 3 Phase		1

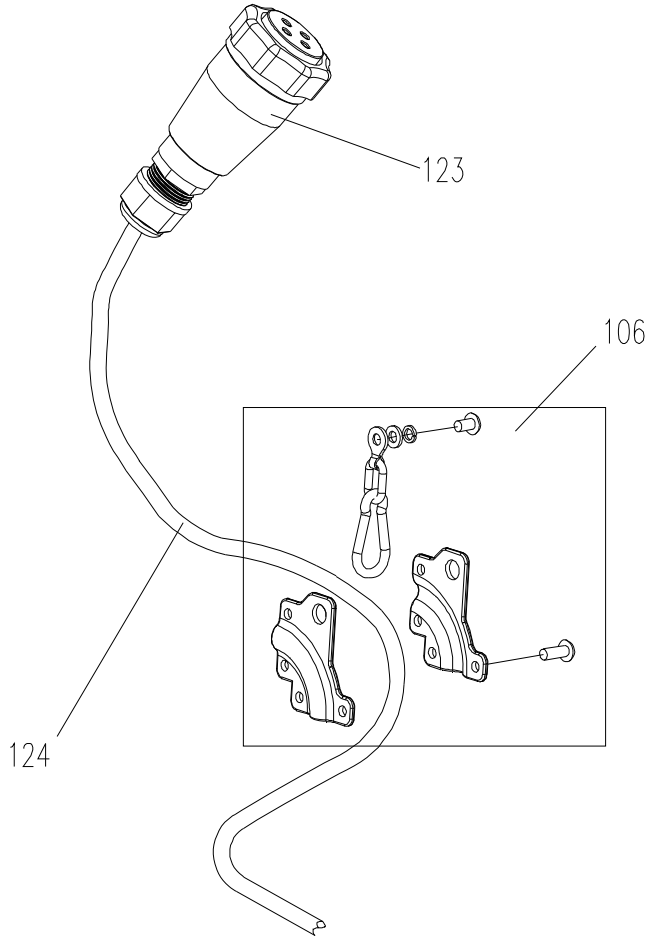

Control Pendant Assembly

Index No.	Part No.	Description	Size	Qty
104	1/2SS-3C-104	Pushbutton Control (1 and 3 Phase, Single Speed)		1
	1/2DS-3C-104	Pushbutton Control (3 Phase, Dual Speed)		1
105	1/2SS-3C-105UG	Male Plug	7P	1
124	1/2SS-3C-124A	Pushbutton Cord		1
125	1/2SS-3C-125	Caution Tag		1
126	1/2SS-3C-126	Phillips Pan Head Machine Screw	M4x25	1
127	TS-1541001	Nylon Lock Hex Nut	M4	1

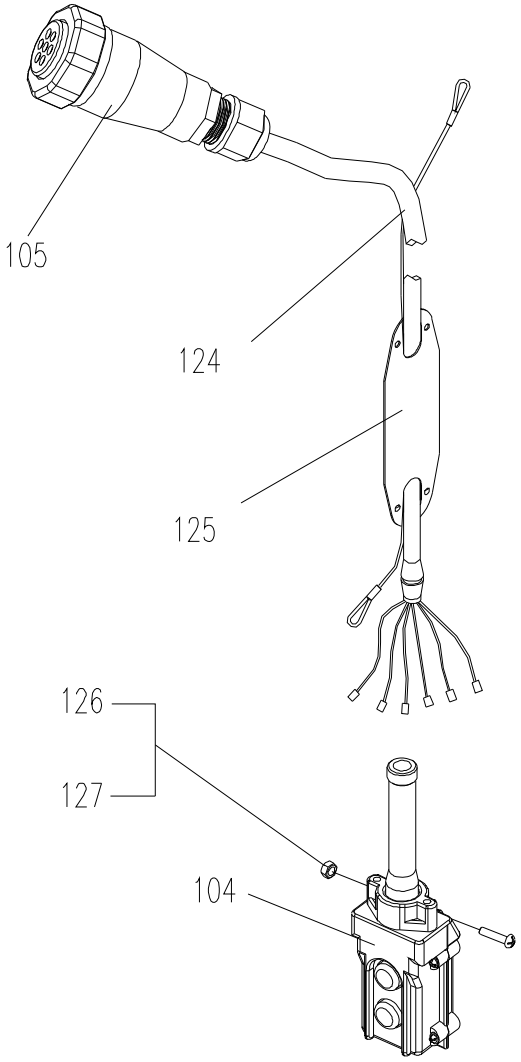

1/2-Ton, 1-Ton and 2-Ton Chain Hoists

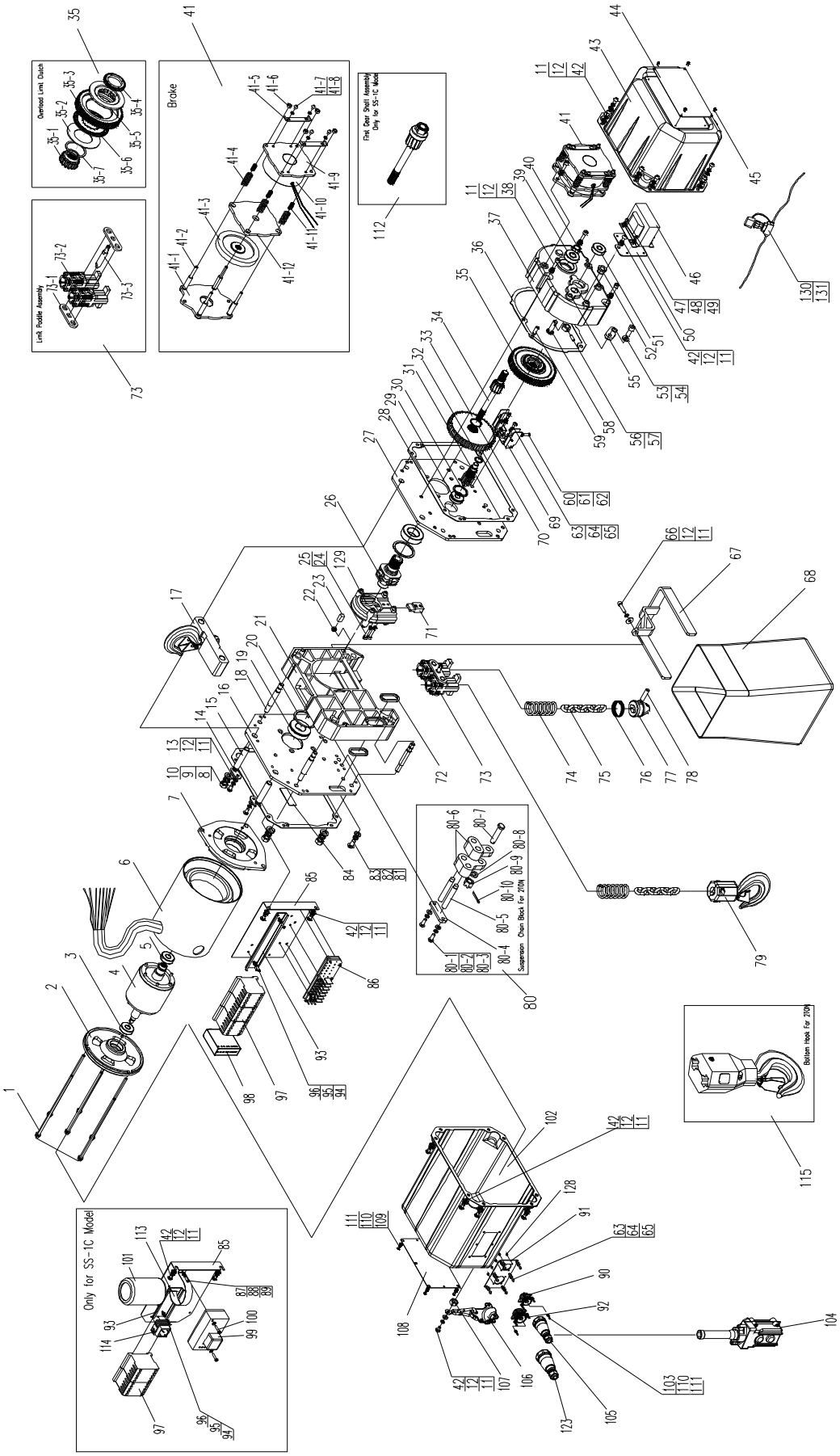

Parts List: 1/2-Ton Chain Hoist

Index No.	Part No.	Description	Size	Qty
1	1/2SS-3C-001	Motor Stay Bolt		3
2	1/2SS-1C-002	Motor Bracket for 1 Phase		1
	1/2SS-3C-002	Motor Bracket for 3 Phase		1
3	1/2SS-3C-003	Ball Bearing	180201kz1	1
4	1/2SS-1C-004	Rotor Assembly for 1 Phase		1
	1/2SS-3C-004	Rotor Assembly for 3 Phase, Single Speed		1
	1/2DS-3C-004	Rotor Assembly for 3 Phase, Dual Speed		1
5	1/2SS-3C-005	Ball Bearing	180204kz1	1
6	1/2SS-1C-006	Motor Case Assembly for 1 Phase		1
	1/2SS-3C-006	Motor Case Assembly for 3 Phase, Single Speed		1
	1/2DS-3C-006	Motor Case Assembly for 3 Phase, Dual Speed		1
7	1/2SS-1C-007	Motor Right-End Cover for 1 Phase		1
	1/2SS-3C-007	Motor Right-End Cover for 3 Phase		1
8	1/2SS-3C-008	Hex Nut	M10	8
9	1/2SS-3C-009	Lock Washer	10mm	8
10	1/2SS-3C-010	Plain Washer	10mm	8
11	1/2SS-3C-011	Plain Washer	6mm	30
12	1/2SS-3C-012	Lock Washer	6mm	30
13	1/2SS-3C-013	Phillips Pan Head Machine Screw	M6x12	2
14	1/2SS-3C-014	Stay Bolt Block for Top Hook Assembly		2
15	1/2SS-3C-015	Stay Bolt for Top Hook Assembly		2
16	1/2SS-3C-016	Motor Side Plate		1
17	1/2SS-3C-017	Top Hook Assembly		1
18	1/2SS-3C-018	Stay Bolt for Motor Side Plate		4
19	1/2SS-3C-019	Ball Bearing with Retainer	150205	2
20	1/2SS-3C-020	Stop Ring	52/57.9	2
21	1/2SS-3C-021	Sheave Cover		1
22	1/2SS-3C-022	Locknut	M6	1
23	1/2SS-3C-023	Rubber Plug		2
24	1/2SS-3C-024	Socket Head Cap Screw	M5x25	2
25	1/2SS-3C-025	Lock Washer	5mm	2
26	1/2SS-3C-026	Lift Wheel		1
27	1/2SS-3C-027	Gear Side Plate		1
28	1/2SS-3C-028	Gear Side Plate Gasket		2
29	1/2SS-3C-029	Ball Bearing with Retainer	150201	1
30	1/2SS-3C-030	Stop Ring	32/36.6	1
31	1/2SS-3C-031	Second Gear Shaft		1
32	1/2SS-3C-032	Snap Ring	16mm	1
33	1/2SS-3C-033	Lift Gear		1
34	1/2SS-3C-034	First Gear Shaft for 3 Phase		1
35	1/2SS-3C-035	Overload Limit Clutch		1
35-1	1/2SS-3C-03501	Spline Sleeve		1
35-2	1/2SS-3C-03502	Wing Spring		1
35-3	1/2SS-1C-03503	Middle Gear for 1 Phase		1
	1/2SS-3C-03503	Middle Gear for 3 Phase		1
35-4	1/2SS-3C-03504	Adjust Round Nut		1
35-5	1/2SS-3C-03505	Clutch Support		1
35-6	1/2SS-3C-03506	Friction Disc		1
35-7	1/2SS-3C-03507	Adjust Washer		1
36	1/2SS-3C-036	Gear Case Seal		1
37	1/2SS-3C-037	Gear Case		1
38	1/2SS-3C-038	Socket Head Cap Screw	M6x20	5
39	1/2SS-3C-039	Ball Bearing	180202kz1	1
40	1/2SS-3C-040	Snap Ring (for 3 Phase only)	15mm	1
41	1/2SS-1C-041	DC Brake for 1 Phase		1
	1/2SS-3C-041	DC Brake for 3 Phase		1
41-1	1/2SS-3C-04101	Brake Bracket		2

41-2	1/2SS-3C-04102	Brake Stay Bolt		2
41-3	1/2SS-1C-04103	Friction Pad for 1 Phase		1
	1/2SS-3C-04103	Friction Pad for 3 Phase		1
41-4	1/2SS-1C-04104	Brake Spring for 1 Phase		4
	1/2SS-3C-04104	Brake Spring for 3 Phase		4
41-5	1/2SS-3C-04105	Locking Plate		2
41-6	1/2SS-3C-022	Lock Nut	M6	4
41-7	1/2SS-3C-04107	Pan Head Screw	M5x6	4
41-8	1/2SS-3C-04108	Lock Washer	5mm	4
41-9	1/2SS-3C-04109	Brake Housing		1
41-10	1/2SS-1C-04110	Brake Coil for 1 Phase		1
	1/2SS-3C-04110	Brake Coil for 3 Phase		1
41-11	1/2SS-3C-04111	Brake Spring		4
41-12	1/2SS-3C-04112	Brake Armature		1
42	1/2SS-3C-042	Phillips Pan Head Machine Screw	M6x10	20
43	1/2SS-3C-043	Gear Side Cover (Include Balance Block)		1
44	1/2SS-3C-044	Capacity Label for 1/2T		1
45	1/2SS-3C-045	Socket Head Cap Screw	M3x6	4
46	1/2SS-1C-046UG	Transformer for 1 Phase		1
	1/2SS-3C-046UG	Transformer for 3 Phase		1
47	1/2SS-3C-047	Phillips Pan Head Machine Screw	M4x6	4
48	TS-2361041	Lock Washer	4mm	4
49	TS-1550021	Plain Washer	4mm	4
50	1/2SS-3C-050	Transformer Bracket		1
51	1/2SS-3C-051	Ball Bearing	180201kz1	1
52	1/2SS-3C-052	Steel Collar		1
53	TS-1550061	Plain Washer	8mm	1
54	1/2SS-3C-054	Socket Head Cap Screw	M8x20	1
55	1/2SS-3C-055	Lock Plate for Clutch		1
56	1/2SS-3C-056	Round Pin	A5x16	1
57	1/2SS-3C-057	Adjust Round Nut		1
58	1/2SS-3C-058	Adjust Shaft		1
59	1/2SS-3C-059	Round Pin	A6x12	2
60	1/2SS-3C-060	Phillips Pan Head Machine Screw	M4x16	1
61	TS-1550021	Plain Washer	4mm	1
62	1/2SS-3C-062	Hex Nut	M4	1
63	1/2SS-3C-063	Phillips Pan Head Machine Screw	M5x10	8
64	TS-2361051	Lock Washer	5mm	8
65	TS-1550031	Plain Washer	5mm	8
66	1/2SS-3C-066	Socket Head Cap Screw	M6x25	1
67	1/2SS-3C-067	Chain Container Bracket		1
68	1/2SS-3C-068	Chain Container		1
69	1/2SS-3C-069UG	Limit Switch Set		1
70	1/2SS-3C-070	Snap Ring	25mm	1
71	1/2SS-3C-071	Block		1
72	1/2SS-3C-072	Cable Input Seal		2
73	1/2SS-3C-073	Limit Paddle Assembly		1
73-1	1/2SS-3C-07301	Side Plate		2
73-2	1/2SS-3C-07302	Chain Guide Block		1
73-3	1/2SS-3C-07303	Chain Guide Shaft		1
74	1/2SS-3C-074	Limit Spring		2
75	1/2SS-3C-075	Load Chain for 1/2T *	Ø 6.3x19mm	1
76	1/2SS-3C-076	Retainer Ring		1
77	1/2SS-3C-077	Chain Stop		1
78	1/2SS-3C-078	Pin		1
79	1/2SS-3C-079	Bottom Hook Assembly for 1/2T		1
81	1/2SS-3C-081	Phillips Pan Head Machine Screw	M8x16	1
82	1/2SS-3C-082	Lock Washer	8mm	1

** Specify length of Load Chain when ordering.*

83	TS-1550061	Plain Washer	8mm	1
84	1/2SS-3C-084	Motor Cover Packing		2
85	1/2SS-1C-085	Electric Component Board for 1 Phase		1
	1/2SS-3C-085	Electric Component Board for 3 Phase		1
86	1/2SS-3C-086	Volts Conversion (for 3 Phase Single Speed)		1
	1/2DS-3C-086A	Volts Conversion (for 3 Phase Dual Speed)		1
87	1/2SS-3C-047	Phillips Pan Head Machine Screw (1 Phase only) M4x6		1
88	TS-2361041	Lock Washer (1 Phase only)	4mm	1
89	TS-1550021	Plain Washer (1 Phase only)	4mm	1
90	1/2SS-3C-090UG	Female Connector for Push Button Cord	7P	1
91	1/2SS-3C-091UG	Quick Connector Board		1
92	1/2SS-3C-092UG	Female Connector for Power Cord	4P	1
93	1/2SS-1C-093	Contactor Holder for 1 Phase		1
	1/2SS-3C-093	Contactor Holder for 3 Phase		1
94	TS-2284082	Phillips Pan Head Machine Screw	M4x8	2
95	TS-2361041	Lock Washer	4mm	2
96	TS-1550021	Plain Washer	4mm	2
97	1/2SS-1C-097UG	Magnetic Contactor for 1 Phase		2
	1/2SS-3C-097UG	Magnetic Contactor for 3 Phase (Single Speed 2pcs, Dual Speed 4 pcs)		
98	1/2SS-3C-098	Reverse Phase Inspector (3 Phase only)	230V/460V/3Ph/60Hz	1
99	1/2SS-1C-099-A	Solid State Switch (1 Phase only)		1
100	TS-2284352	Phillips Pan Head Machine Screw	M4x35	2
101	1/2SS-1C-101	Capacitor (1 Phase only)	Ø65, 600uF	1
102	1/2SS-3C-102UG	Motor Side Cover		1
103	1/2SS-3C-103UG	Phillips Pan Head Machine Screw	M3x12	8
104	1/2SS-3C-104	Pushbutton Control for 1 Phase and 3 Phase, Single Speed		1
	1/2DS-3C-104	Pushbutton Control for 3 Phase, Dual Speed		1
105	1/2SS-3C-105UG	Male Plug	7P	1
106	1/2SS-3C-106	Cable Holder		1
107	1/2SS-3C-022	Lock Nut	M6	1
108	1/2SS-3C-108	ID Label		1
109	1/2SS-3C-109	Phillips Pan Head Machine Screw	M3x6	4
110	1/2SS-3C-110	Lock Washer	3mm	12
111	1/2SS-3C-111	Plain Washer	3mm	12
112	1/2SS-1C-112	First Gear Shaft Assembly(for 1 Phase only)		1
113	1/2SS-1C-113	Capacitor Holder (for 1 Phase only)	Ø 65	1
114	1/2SS-1C-114	Rectifier (for 1 Phase only)	50A	1
123	1/2SS-3C-123UG	Male Plug	4P	1
128	1/2SS-3C-128	Lock Nut	M3	8
129	1/2SS-3C-129	Chain Guide		1
130	1/2SS-3C-130	Fuse	2A	1
131	1/2SS-3C-131	Fuse Cover		1

Parts List: 1-Ton and 2-Ton Chain Hoists

Index No.	Part No.	Description	Size	Qty
1	1SS-3C-001	Motor Stay Bolt		3
2	1SS-1C-002	Motor Bracket for 1 Phase		1
	1SS-3C-002	Motor Bracket for 3 Phase		1
3	1SS-3C-003	Ball Bearing	180203kz1	1
4	1SS-1C-004	Rotor Assembly for 1 Phase		1
	1SS-3C-004	Rotor Assembly for 3 Phase, Single Speed		1
	1DS-3C-004	Rotor Assembly for 3 Phase, Dual Speed		1
5	1SS-3C-005	Ball Bearing	180206kz1	1
6	1SS-1C-006	Motor Case Assembly for 1 Phase		1
	1SS-3C-006	Motor Case Assembly for 3 Phase, Single Speed		1
	1DS-3C-006	Motor Case Assembly for 3 Phase, Dual Speed		1
7	1SS-1C-007	Motor Right-End Cover for 1 Phase		1
	1SS-3C-007	Motor Right-End Cover for 3 Phase		1
8	1/2SS-3C-008	Hex Nut	M10	8
9	1/2SS-3C-009	Lock Washer	10mm	8
10	1/2SS-3C-010	Plain Washer	10mm	8
11	1/2SS-3C-011	Plain Washer	6mm	30
12	1/2SS-3C-012	Lock Washer	6mm	30
13	1/2SS-3C-013	Phillips Pan Head Machine Screw	M6x12	2
14	1SS-3C-014	Stay Bolt Block for Top Hook Assembly		2
15	1SS-3C-015	Stay Bolt for Top Hook Assembly		2
16	1SS-3C-016	Motor Side Plate		1
17	1SS-3C-017	Top Hook Assembly for 1-Ton		1
	2SS-3C-017	Top Hook Assembly for 2-Ton		1
18	1SS-3C-018	Stay Bolt for Motor Side Plate		4
19	1SS-3C-019	Ball Bearing with Retainer	150207	2
20	1SS-3C-020	Stop Ring	72/78.8	2
21	1SS-3C-021	Sheave Cover		1
22	1SS-3C-022	Lock Nut	M8	1
23	1SS-3C-023	Rubber Plug		2
24	1SS-3C-024	Socket Head Cap Screw	M6x25	2
25	1SS-3C-025	Lock Washer	6mm	2
26	1SS-3C-026	Lift Wheel		1
27	1SS-3C-027	Gear Side Plate		1
28	1SS-3C-028	Gear Side Plate Gasket		2
29	1SS-3C-029	Ball Bearing with Retainer	50403	1
30	1SS-3C-030	Stop Ring	62/67.6	1
31	1SS-3C-031	Second Gear Shaft		1
32	1SS-3C-032	Snap Ring	20mm	1
33	1SS-3C-033	Lift Gear		1
34	1SS-3C-034	First Gear Shaft for 3 Phase		1
35	1SS-3C-035	Overload Limit Clutch		1
35-1	1SS-3C-03501	Spline Sleeve		1
35-2	1SS-3C-03502	Wing Spring		1
35-3	1SS-1C-03503	Middle Gear for 1 Phase		1
	1SS-3C-03503	Middle Gear for 3 Phase		1
35-4	1SS-3C-03504	Adjust Round Nut		1
35-5	1SS-3C-03505	Clutch Support		1
35-6	1SS-3C-03506	Friction Disc		1
35-7	1SS-3C-03507	Adjust Washer		1
36	1SS-3C-036	Gear Case Seal		1
37	1SS-3C-037	Gear Case		1
38	1/2SS-3C-038	Socket Head Cap Screw	M6x20	5
39	1SS-3C-039	Ball Bearing	180205kz1	1
40	1SS-3C-040	Snap Ring (for 3 Phase only)	25mm	1
41	1SS-1C-041	DC Brake for 1 Phase		1
	1SS-3C-041	DC Brake for 3 Phase		1

41-1	1SS-3C-04101	Brake Bracket		1
41-2	1SS-3C-04102	Brake Stay Bolt		4
41-3	1SS-1C-04103	Friction Pad for 1 Phase		1
	1SS-3C-04103	Friction Pad for 3 Phase		1
41-4	1SS-1C-04104	Brake Spring for 1 Phase		4
	1SS-3C-04104	Brake Spring for 3 Phase		4
41-5	1SS-3C-04105	Locking Plate		2
41-6	1SS-3C-022	Lock Nut	M8	4
41-7	1/2SS-3C-04107	Pan Head Screw	M5x6	4
41-8	1/2SS-3C-04108	Lock Washer	5mm	4
41-9	1SS-3C-04109	Brake Housing		1
41-10	1SS-1C-04110	Brake Coil for 1 Phase		1
	1SS-3C-04110	Brake Coil for 3 Phase		1
41-11	1SS-3C-04111	Brake Spring		4
41-12	1SS-3C-04112	Brake Armature		1
42	1/2SS-3C-042	Pan Head Screw	M6x10	20
43	1SS-3C-043	Gear Side Cover		1
44	1SS-3C-044	Capacity Label for 1-Ton		1
	2SS-3C-044	Capacity Label for 2-Ton		1
45	1/2SS-3C-045	Socket Head Cap Screw	M3x6	4
46	1/2SS-1C-046UG	Transformer for 1 Phase		1
	1/2SS-3C-046UG	Transformer for 3 Phase		1
47	1/2SS-3C-047	Phillips Pan Head Machine Screw	M4x6	4
48	TS-2361041	Lock Washer	4mm	4
49	TS-1550021	Plain Washer	4mm	4
50	1/2SS-3C-050	Transformer Bracket		1
51	1SS-3C-051	Ball Bearing	180203kz1	1
52	1SS-3C-052	Steel Collar		1
53	TS-1550061	Plain Washer	8mm	1
54	1/2SS-3C-054	Socket Head Cap Screw	M8x20	1
55	1SS-3C-055	Lock Plate for Clutch		1
56	1/2SS-3C-056	Round Pin	A5x16	1
57	1/2SS-3C-057	Adjust Round Nut		1
58	1SS-3C-058	Adjust Shaft		1
59	1/2SS-3C-059	Round Pin	A6x12	2
60	1/2SS-3C-060	Phillips Pan Head Machine Screw	M4x16	1
61	TS-1550021	Plain Washer	4mm	1
62	1/2SS-3C-062	Hex Nut	M4	1
63	1/2SS-3C-063	Phillips Pan Head Machine Screw	M5x10	8
64	TS-2361051	Lock Washer	5mm	8
65	TS-1550031	Plain Washer	5mm	8
66	1SS-3C-066	Socket Head Cap Screw	M8x25	1
67	1/2SS-3C-067	Chain Container Bracket		1
68	1SS-3C-068	Chain Container		1
69	1/2SS-3C-069UG	Limit Switch Set		1
70	1SS-3C-070	Snap Ring	34mm	1
71	1SS-3C-071	Block		1
72	1/2SS-3C-072	Cable Input Seal		2
73	1SS-3C-073	Limit Paddle Assembly		1
73-1	1SS-3C-07301	Side Plate		2
73-2	1SS-3C-07302	Chain Guide Block		1
73-3	1SS-3C-07303	Chain Guide Shaft		1
74	1SS-3C-074	Limit Spring		2
75	1SS-3C-075	Load Chain for 1T, 2T, 3T, and 5T *	Ø 8x24mm	1
76	1SS-3C-076	Retainer Ring		1
77	1SS-3C-077	Chain Stop		1
78	1SS-3C-078	Pin		1
79	1SS-3C-079	Bottom Hook Assembly for 1-Ton		1
80	1SS-3C-080	Suspension Chain Block for 2-Ton		1

** Specify length of Load Chain when ordering.*

80-1	1SS-3C-08001	Phillips Pan Head Machine Screw	M6x16	2
80-2	1/2SS-3C-012	Lock Washer	6mm	2
80-3	1/2SS-3C-011	Plain Washer	6mm	2
80-4	2SS-3C-08004	Cover		1
80-5	2SS-3C-08005	Shaft		2
80-6	2SS-3C-08006	Chain Holder		2
80-7	2SS-3C-08007	Pin		1
80-8	1/2SS-3C-053	Plain Washer	8mm	1
80-9	1SS-3C-08009	Slotted Hex Nut	M8	1
80-10	1SS-3C-08010	Cotton Pin	2x16mm	1
81	1SS-3C-081	Phillips Pan Head Machine Screw	M8x16	1
82	1/2SS-3C-082	Lock Washer	8mm	1
83	TS-1550061	Plain Washer	8mm	1
84	1/2SS-3C-084	Motor Cover Packing		2
85	1/2SS-1C-085	Electric Component Board for 1 Phase		1
	1/2SS-3C-085	Electric Component Board for 3 Phase		1
86	1/2SS-3C-086	Volts Conversion (for 3 Phase Single Speed)		1
	1/2DS-3C-086A	Volts Conversion (for 3 Phase Dual Speed)		1
87	1/2SS-3C-047	Phillips Pan Head Machine Screw (1 Phase only)	M4x6	1
88	TS-2361041	Lock Washer (1 Phase only)	4mm	1
89	TS-1550021	Plain Washer (1 Phase only)	4mm	1
90	1/2SS-3C-090UG	Female Connector for Push Button Cord	7P	1
91	1/2SS-3C-091UG	Quick Connector Board		1
92	1/2SS-3C-092UG	Female Connector for Power Cord	4P	1
93	1SS-1C-093	Contactor Holder for 1 Phase		1
	1/2SS-3C-093	Contactor Holder for 3 Phase		1
94	TS-2284082	Phillips Pan Head Machine Screw	M4x8	2
95	TS-2361041	Lock Washer	4mm	2
96	TS-1550021	Plain Washer	4mm	2
97	1/2SS-1C-097UG	Magnetic Contactor for 1 Phase		2
	1/2SS-3C-097UG	Magnetic Contactor for 3 Phase	(Single Speed 2pcs, Dual Speed 4 pcs)	
98	1/2SS-3C-098	Reverse Phase Inspector (3 Phase only)	230V/460V/3Ph/60Hz	1
99	1/2SS-1C-099-A	Solid State Switch (1 Phase only)		1
100	TS-2284352	Phillips Pan Head Machine Screw	M4x35	2
101	1/2SS-1C-101	Capacitor (1 Phase only)	Ø65, 600uF	1
102	1SS-3C-102UG	Motor Side Cover		1
103	1/2SS-3C-103UG	Phillips Pan Head Machine Screw	M3x12	8
104	1/2SS-3C-104	Pushbutton Control for 1 Phase and 3 Phase, Single Speed		1
	1/2DS-3C-104	Pushbutton Control for 3 Phase, Dual Speed		1
105	1/2SS-3C-105UG	Male Plug	7P	1
106	1/2SS-3C-106	Cable Holder		1
107	1/2SS-3C-022	Lock Nut	M6	1
108	1SS-3C-108	ID Label for 1-Ton		1
	2SS-3C-108	ID Label for 2-Ton		1
109	1/2SS-3C-109	Phillips Pan Head Machine Screw	M3x6	4
110	1/2SS-3C-110	Lock Washer	3mm	12
111	1/2SS-3C-111	Plain Washer	3mm	12
112	1SS-1C-112	First Gear Shaft Assembly (for 1 Phase only)		1
113	1/2SS-1C-113	Capacitor Holder (for 1 Phase only)	Ø 65	1
114	1/2SS-1C-114	Rectifier (for 1 Phase only)	50A	1
115	2SS-3C-115	Bottom Hook Assembly for 2-Ton		1
123	1/2SS-3C-123UG	Male Plug	4P	1
128	1/2SS-3C-128	Lock Nut	M3	8
129	1SS-3C-129	Chain Guide		1
130	1/2SS-3C-130	Fuse	2A	1
131	1/2SS-3C-131	Fuse Cover		1

3-Ton Chain Hoist

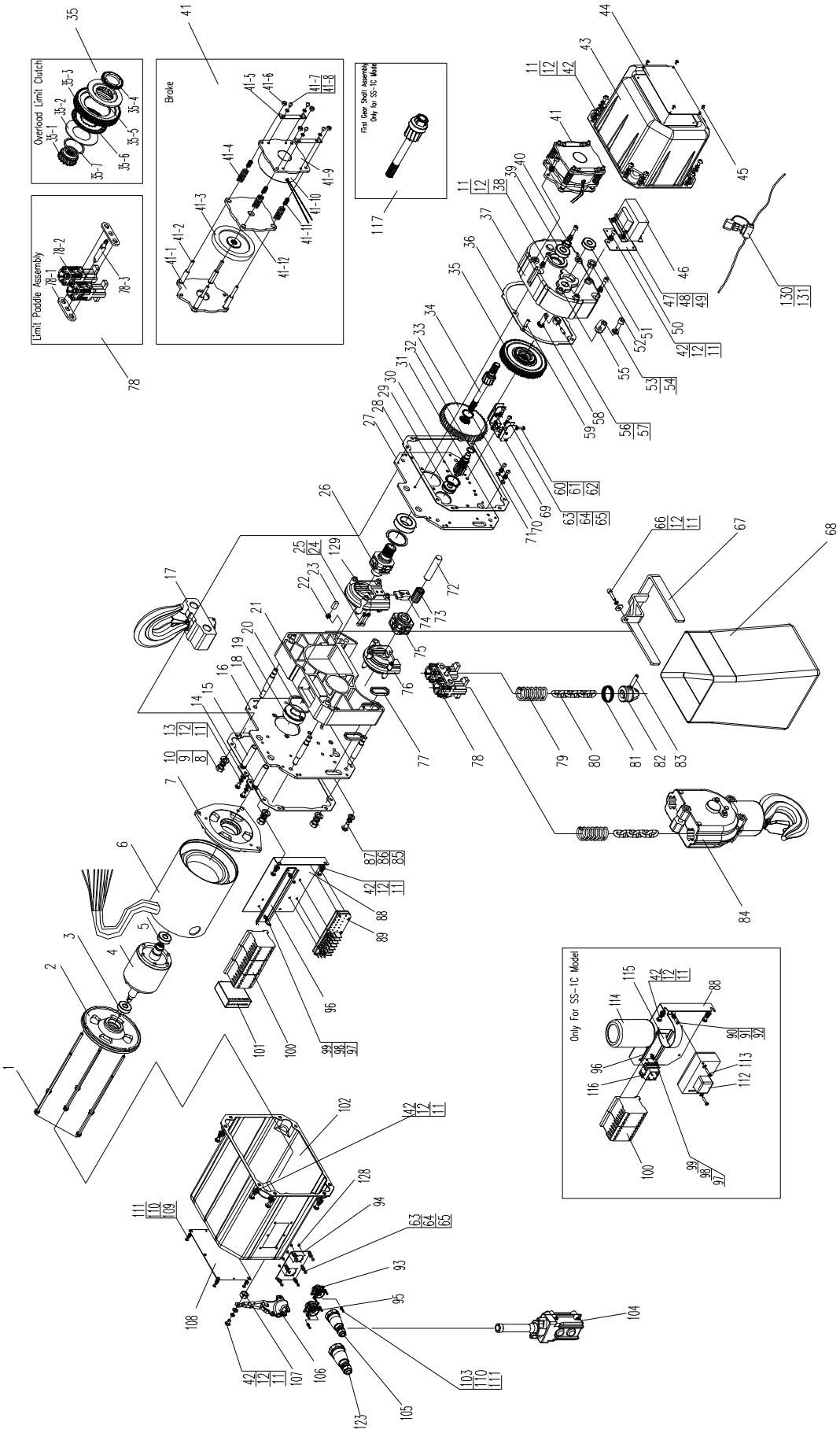

Parts List: 3-Ton Chain Hoist

Index No.	Part No.	Description	Size	Qty
1	1SS-3C-001	Motor Stay Bolt		3
2	1SS-1C-002	Motor Bracket for 1 Phase		1
	1SS-3C-002	Motor Bracket for 3 Phase		1
3	1SS-3C-003	Ball Bearing	180203kz1	1
4	1SS-1C-004	Rotor Assembly for 1 Phase		1
	1SS-3C-004	Rotor Assembly for 3 Phase, Single Speed		1
	1DS-3C-004	Rotor Assembly for 3 Phase, Dual Speed		1
5	1SS-3C-005	Ball Bearing	180206kz1	1
6	1SS-1C-006	Motor Case Assembly for 1 Phase		1
	1SS-3C-006	Motor Case Assembly for 3 Phase, Single Speed		1
	1DS-3C-006	Motor Case Assembly for 3 Phase, Dual Speed		1
7	1SS-1C-007	Motor Right-End Cover for 1 Phase		1
	1SS-3C-007	Motor Right-End Cover for 3 Phase		1
8	1/2SS-3C-008	Hex Nut	M10	8
9	1/2SS-3C-009	Lock Washer	10mm	8
10	1/2SS-3C-010	Plain Washer	10mm	8
11	1/2SS-3C-011	Plain Washer	6mm	30
12	1/2SS-3C-012	Lock Washer	6mm	30
13	1/2SS-3C-013	Phillips Pan Head Machine Screw	M6x12	2
14	1SS-3C-014	Stay Bolt Block for Top Hook Assembly		2
15	3SS-3C-015	Stay Bolt for Top Hook Assembly		2
16	3SS-3C-016	Motor Side Plate		1
17	3SS-3C-017	Top Hook Assembly for 3T		1
18	1SS-3C-018	Stay Bolt for Motor Side Plate		4
19	1SS-3C-019	Ball Bearing with Retainer	150207	2
20	1SS-3C-020	Stop Ring	72/78.8	2
21	3SS-3C-021	Sheave Cover		1
22	1SS-3C-022	Lock Nut	M8	1
23	1SS-3C-023	Rubber Plug		2
24	1SS-3C-024	Socket Head Cap Screw	M6x25	2
25	1SS-3C-025	Lock Washer	6mm	2
26	1SS-3C-026	Lift Wheel		1
27	3SS-3C-027	Gear Side Plate		1
28	1SS-3C-028	Gear Side Plate Gasket		2
29	1SS-3C-029	Ball Bearing with Retainer	50403	1
30	1SS-3C-030	Stop Ring	62/67.6	1
31	1SS-3C-031	Second Gear Shaft		1
32	1SS-3C-032	Snap Ring	20mm	1
33	1SS-3C-033	Lift Gear		1
34	1SS-3C-034	First Gear Shaft for 3 Phase		1
35	1SS-3C-035	Overload Limit Clutch		1
35-1	1SS-3C-03501	Spline Sleeve		1
35-2	1SS-3C-03502	Wing Spring		1
35-3	1SS-1C-03503	Middle Gear for 1 Phase		1
	1SS-3C-03503	Middle Gear for 3 Phase		1
35-4	1SS-3C-03504	Adjust Round Nut		1
35-5	1SS-3C-03505	Clutch Support		1
35-6	1SS-3C-03506	Friction Disc		1
35-7	1SS-3C-03507	Adjust Washer		1
36	1SS-3C-036	Gear Case Seal		1
37	1SS-3C-037	Gear Case		1
38	1/2SS-3C-038	Socket Head Cap Screw	M6x20	5
39	1SS-3C-039	Ball Bearing	180205kz1	1
40	1SS-3C-040	Snap Ring (for 3 Phase only)	25mm	1
41	1SS-1C-041	DC Brake for 1 Phase		1
	1SS-3C-041	DC Brake for 3 Phase		1
41-1	1SS-3C-04101	Brake Bracket		1

41-2	1SS-3C-04102	Brake Stay Bolt		4
41-3	1SS-1C-04103	Friction Pad for 1 Phase		1
	1SS-3C-04103	Friction Pad for 3 Phase		1
41-4	1SS-1C-04104	Brake Spring for 1 Phase		4
	1SS-3C-04104	Brake Spring for 3 Phase		4
41-5	1SS-3C-04105	Locking Plate		2
41-6	1SS-3C-022	Lock Nut	M8	4
41-7	1/2SS-3C-04107	Phillips Pan Head Machine Screw	M5x6	4
41-8	1/2SS-3C-04108	Lock Washer	5mm	4
41-9	1SS-3C-04109	Brake Housing		1
41-10	1SS-1C-04110	Brake Coil for 1 Phase		1
	1SS-3C-04110	Brake Coil for 3 Phase		1
41-11	1SS-3C-04111	Brake Spring		4
41-12	1SS-3C-04112	Brake Armature		1
42	1/2SS-3C-042	Phillips Pan Head Machine Screw	M6x10	20
43	1SS-3C-043	Gear Side Cover		1
44	3SS-3C-044	Capacity Label for 3T		1
45	1/2SS-3C-045	Socket Head Cap Screw	M3x6	4
46	1/2SS-1C-046UG	Transformer for 1 Phase		1
	1/2SS-3C-046UG	Transformer for 3 Phase		1
47	1/2SS-3C-047	Phillips Pan Head Machine Screw	M4x6	4
48	TS-2361041	Lock Washer	4mm	4
49	TS-1550021	Plain Washer	4mm	4
50	1/2SS-3C-050	Transformer Bracket		1
51	1SS-3C-051	Ball Bearing	180203kz1	1
52	1SS-3C-052	Steel Collar		1
53	TS-1550061	Plain Washer	8mm	1
54	1/2SS-3C-054	Socket Head Cap Screw	M8x20	1
55	1SS-3C-055	Lock Plate for Clutch		1
56	1/2SS-3C-056	Round Pin	A5x16	1
57	1/2SS-3C-057	Adjust Round Nut		1
58	1SS-3C-058	Adjust Shaft		1
59	1/2SS-3C-059	Round Pin	A6x12	2
60	1/2SS-3C-060	Phillips Pan Head Machine Screw	M4x16	1
61	TS-1550021	Plain Washer	4mm	1
62	1/2SS-3C-062	Hex Nut	M4	1
63	1/2SS-3C-063	Phillips Pan Head Machine Screw	M5x10	8
64	TS-2361051	Lock Washer	5mm	8
65	TS-1550031	Plain Washer	5mm	8
66	1SS-3C-066	Socket Head Cap Screw	M8x25	1
67	1/2SS-3C-067	Chain Container Bracket		1
68	1SS-3C-068	Chain Container (for 10’ Lift)		1
	3SS-3C-068	Chain Container (for 15’ and 20’ Lift)		1
69	1/2SS-3C-069UG	Limit Switch Set		1
70	1SS-3C-070	Snap Ring	34mm	1
71	3SS-3C-061	Hinge Plate		1
72	3SS-3C-064	Sheave Shaft		1
73	3SS-3C-083	Needle	3x39.8b	24
74	1SS-3C-071	Block		1
75	3SS-3C-088	Sheave		1
76	3SS-3C-089	Sheave Guide		1
77	1/2SS-3C-072	Cable Input Seal		2
78	1SS-3C-073	Limit Paddle Assembly		1
78-1	1SS-3C-07301	Side Plate		2
78-2	1SS-3C-07302	Chain Guide Block		1
78-3	1SS-3C-07303	Chain Guide Shaft		1
79	1SS-3C-074	Limit Spring		2
80	1SS-3C-075	Load Chain for 1T, 2T, 3T and 5T *	Ø 8x24mm	1

** Specify length of Load Chain when ordering.*

81	1SS-3C-076	Retainer Ring		1
82	1SS-3C-077	Chain Stop		1
83	1SS-3C-078	Pin		1
84	3SS-3C-079	Bottom Hook Assembly for 3T		1
85	1SS-3C-081	Phillips Pan Head Machine Screw	M8x16	1
86	1/2SS-3C-082	Lock Washer	8mm	1
87	TS-1550061	Plain Washer	8mm	1
88	1/2SS-1C-085	Electric Component Board for 1 Phase		1
	1/2SS-3C-085	Electric Component Board for 3 Phase		1
89	1/2SS-3C-086	Volts Conversion (for 3 Phase Single Speed)		1
	1/2DS-3C-086A	Volts Conversion (for 3 Phase Dual Speed)		1
90	1/2SS-3C-047	Phillips Pan Head Machine Screw (for 1 Phase only) M4x6		1
91	TS-2361041	Lock Washer (for 1 Phase only)	4mm	1
92	TS-1550021	Plain Washer (for 1 Phase only)	4mm	1
93	1/2SS-3C-090UG	Female Connector for Push Button Cord	7P	1
94	1/2SS-3C-091UG	Quick Connector Board		1
95	1/2SS-3C-092UG	Female Connector for Power Cord	4P	1
96	1SS-1C-093	Contactor Holder for 1 Phase		1
	1/2SS-3C-093	Contactor Holder for 3 Phase		1
97	TS-2284082	Phillips Pan Head Machine Screw	M4x8	2
98	TS-2361041	Lock Washer	4mm	2
99	TS-1550021	Plain Washer	4mm	2
100	1/2SS-1C-097UG	Magnetic Contactor for 1 Phase		2
	1/2SS-3C-097UG	Magnetic Contactor for 3 Phase (Single Speed 2pcs, Dual Speed 4Pcs)		
101	1/2SS-3C-098	Reverse Phase Inspector (3 Phase only)	230V/460V/3Ph/60Hz	1
102	1SS-3C-102UG	Motor Side Cover		1
103	1/2SS-3C-103UG	Phillips Pan Head Machine Screw	M3x12	8
104	1/2SS-3C-104	Pushbutton Control for 1 Phase and 3 Phase, Single Speed		1
	1/2DS-3C-104	Pushbutton Control for 3 Phase, Dual Speed		1
105	1/2SS-3C-105UG	Male Plug	7P	1
106	1/2SS-3C-106	Cable Holder		1
107	1/2SS-3C-022	Lock Nut	M6	1
108	3SS-3C-108	ID Label for 3T		1
109	1/2SS-3C-109	Phillips Pan Head Machine Screw	M3x6	4
110	1/2SS-3C-110	Lock Washer	3mm	8
111	1/2SS-3C-111	Plain Washer	3mm	8
112	1/2SS-1C-099-A	Solid State Switch (1 Phase only)		1
113	TS-2284352	Phillips Pan Head Machine Screw	M4x35	2
114	1/2SS-1C-101	Capacitor (for 1 Phase only)	Ø65, 600uF	1
115	1/2SS-1C-113	Capacitor Holder (for 1 Phase only)	Ø 65	1
116	1/2SS-1C-114	Rectifier (for 1 Phase only)	50A	1
117	1SS-1C-112	First Gear Shaft Assembly (for 1 Phase only)		1
123	1/2SS-3C-123UG	Male Plug	4P	1
128	1/2SS-3C-128	Lock Nut	M3	8
129	1SS-3C-129	Chain Guide		1
130	1/2SS-3C-130	Fuse	2A	1
131	1/2SS-3C-131	Fuse Cover		1

5-Ton Chain Hoist

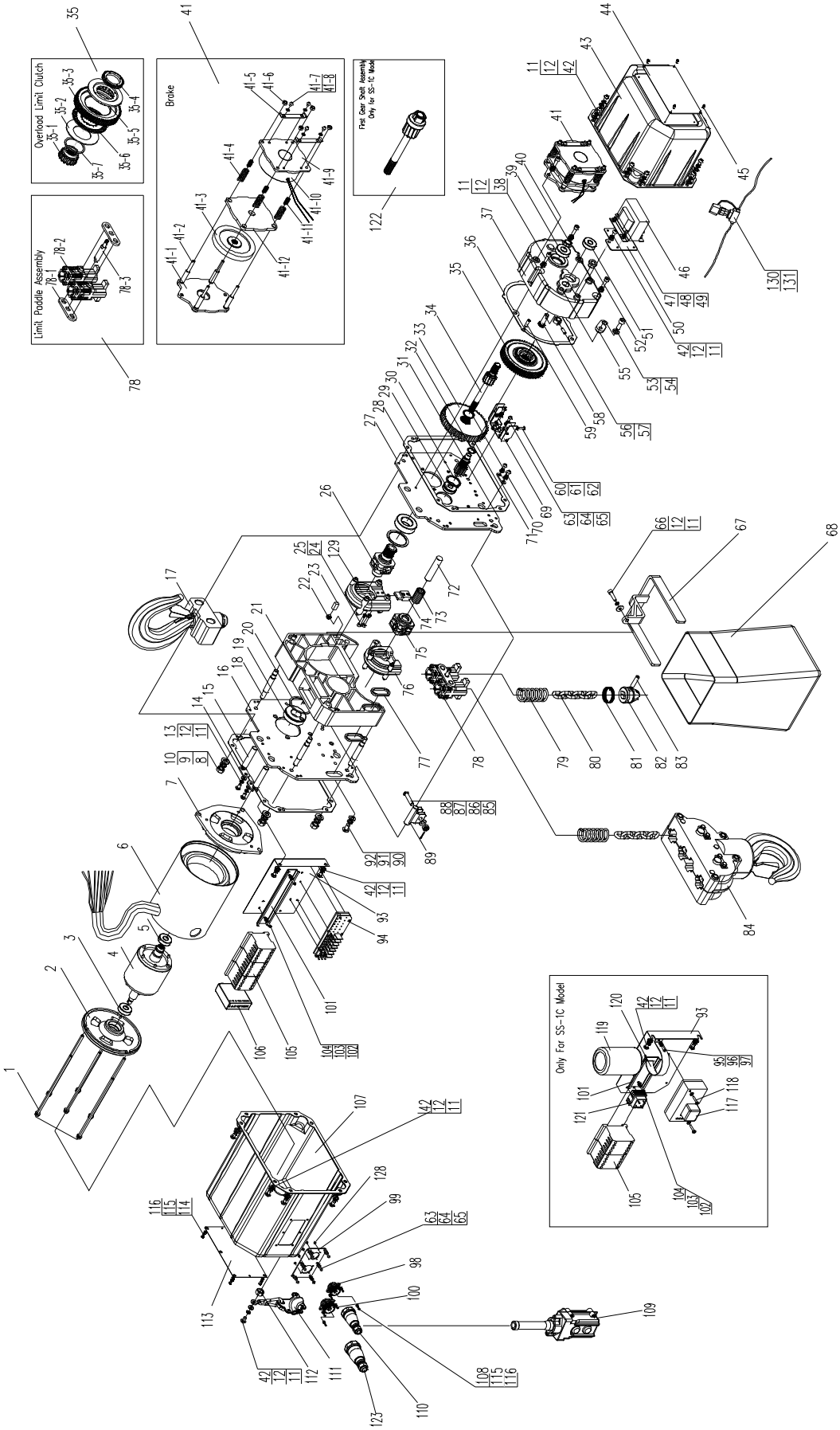

Parts List: 5-Ton Chain Hoist

Index No.	Part No.	Description	Size	Qty
1	1SS-3C-001	Motor Stay Bolt		3
2	1SS-1C-002	Motor Bracket for 1 Phase		1
	1SS-3C-002	Motor Bracket for 3 Phase		1
3	1SS-3C-003	Ball Bearing	180203kz1	1
4	1SS-1C-004	Rotor Assembly for 1 Phase		1
	1SS-3C-004	Rotor Assembly for 3 Phase, Single Speed		1
	1DS-3C-004	Rotor Assembly for 3 Phase, Dual Speed		1
5	1SS-3C-005	Ball Bearing	180206kz1	1
6	1SS-1C-006	Motor Case Assembly for 1 Phase		1
	1SS-3C-006	Motor Case Assembly for 3 Phase, Single Speed		1
	1DS-3C-006	Motor Case Assembly for 3 Phase, Dual Speed		1
7	1SS-1C-007	Motor Right-End Cover for 1 Phase		1
	1SS-3C-007	Motor Right-End Cover for 3 Phase		1
8	1/2SS-3C-008	Hex Nut	M10	8
9	1/2SS-3C-009	Lock Washer	10mm	8
10	1/2SS-3C-010	Plain Washer	10mm	8
11	1/2SS-3C-011	Plain Washer	6mm	30
12	1/2SS-3C-012	Lock Washer	6mm	30
13	1/2SS-3C-013	Phillips Pan Head Machine Screw	M6x12	2
14	1SS-3C-014	Stay Bolt Block for Top Hook Assembly		2
15	3SS-3C-015	Stay Bolt for Top Hook Assembly		2
16	5SS-3C-016	Motor Side Plate		1
17	5SS-3C-017	Top Hook Assembly for 5T		1
18	1SS-3C-018	Stay Bolt for Motor Side Plate		4
19	1SS-3C-019	Ball Bearing with Retainer	150207	2
20	1SS-3C-020	Stop Ring	72/78.8	2
21	3SS-3C-021	Sheave Cover		1
22	1SS-3C-022	Lock Nut	M8	1
23	1SS-3C-023	Rubber Plug		2
24	1SS-3C-024	Socket Head Cap Screw	M6x25	2
25	1SS-3C-025	Lock Washer	6mm	2
26	1SS-3C-026	Lift Wheel		1
27	5SS-3C-027	Gear Side Plate		1
28	1SS-3C-028	Gear Side Plate Gasket		2
29	1SS-3C-029	Ball Bearing with Retainer	50403	1
30	1SS-3C-030	Stop Ring	62/67.6	1
31	1SS-3C-031	Second Gear Shaft		1
32	1SS-3C-032	Snap Ring	20mm	1
33	1SS-3C-033	Lift Gear		1
34	1SS-3C-034	First Gear Shaft for 3 Phase		1
35	1SS-3C-035	Overload Limit Clutch		1
35-1	1SS-3C-03501	Spline Sleeve		1
35-2	1SS-3C-03502	Wing Spring		1
35-3	1SS-1C-03503	Middle Gear for 1 Phase		1
	1SS-3C-03503	Middle Gear for 3 Phase		1
35-4	1SS-3C-03504	Adjust Round Nut		1
35-5	1SS-3C-03505	Clutch Support		1
35-6	1SS-3C-03506	Friction Disc		1
35-7	1SS-3C-03507	Adjust Washer		1
36	1SS-3C-036	Gear Case Seal		1
37	1SS-3C-037	Gear Case		1
38	1/2SS-3C-038	Socket Head Cap Screw	M6x20	5
39	1SS-3C-039	Ball Bearing	180205kz1	1
40	1SS-3C-040	Snap Ring (for 3 Phase only)	25mm	1
41	1SS-1C-041	DC Brake for 1 Phase		1
	1SS-3C-041	DC Brake for 3 Phase		1
41-1	1SS-3C-04101	Brake Bracket		1

41-2	1SS-3C-04102	Brake Stay Bolt		4
41-3	1SS-1C-04103	Friction Pad for 1 Phase		1
	1SS-3C-04103	Friction Pad for 3 Phase		1
41-4	1SS-1C-04104	Brake Spring for 1 Phase		4
	1SS-3C-04104	Brake Spring for 3 Phase		4
41-5	1SS-3C-04105	Locking Plate		2
41-6	1SS-3C-022	Lock Nut	M8	4
41-7	1/2SS-3C-04107	Phillips Pan Head Machine Screw	M5x6	4
41-8	1/2SS-3C-04108	Lock Washer	5mm	4
41-9	1SS-3C-04109	Brake Housing		1
41-10	1SS-1C-04110	Brake Coil for 1 Phase		1
	1SS-3C-04110	Brake Coil for 3 Phase		1
41-11	1SS-3C-04111	Brake Spring		4
41-12	1SS-3C-04112	Brake Armature		1
42	1/2SS-3C-042	Phillips Pan Head Machine Screw	M6x10	20
43	1SS-3C-043	Gear Side Cover		1
44	5SS-3C-044	Capacity Label for 5T		1
45	1/2SS-3C-045	Socket Head Cap Screw	M3x6	4
46	1/2SS-1C-046UG	Transformer for 1 Phase		1
	1/2SS-3C-046UG	Transformer for 3 Phase		1
47	1/2SS-3C-047	Phillips Pan Head Machine Screw	M4x6	4
48	TS-2361041	Lock Washer	4mm	4
49	TS-1550021	Plain Washer	4mm	4
50	1/2SS-3C-050	Transformer Bracket		1
51	1SS-3C-051	Ball Bearing	180203kz1	1
52	1SS-3C-052	Steel Collar		1
53	TS-1550061	Plain Washer	8mm	1
54	1/2SS-3C-054	Socket Head Cap Screw	M8x20	1
55	1SS-3C-055	Lock Plate for Clutch		1
56	1/2SS-3C-056	Round Pin	A5x16	1
57	1/2SS-3C-057	Adjust Round Nut		1
58	1SS-3C-058	Adjust Shaft		1
59	1/2SS-3C-059	Round Pin	A6x12	2
60	1/2SS-3C-060	Phillips Pan Head Machine Screw	M4x16	1
61	TS-1550021	Plain Washer	4mm	1
62	1/2SS-3C-062	Hex Nut	M4	1
63	1/2SS-3C-063	Phillips Pan Head Machine Screw	M5x10	8
64	TS-2361051	Lock Washer	5mm	8
65	TS-1550031	Plain Washer	5mm	8
66	1SS-3C-066	Socket Head Cap Screw	M8x25	1
67	1/2SS-3C-067	Chain Container Bracket		1
68	1SS-3C-068	Chain Container (for 10’ Lift)		1
	3SS-3C-068	Chain Container (for 15’ and 20’ Lift)		1
69	1/2SS-3C-069UG	Limit Switch Set		1
70	1SS-3C-070	Snap Ring	34mm	1
71	3SS-3C-061	Hinge Plate		1
72	3SS-3C-064	Sheave Shaft		1
73	3SS-3C-083	Needle	3x39.8b	24
74	1SS-3C-071	Block		1
75	3SS-3C-088	Sheave		1
76	3SS-3C-089	Sheave Guide		1
77	1/2SS-3C-072	Cable Input Seal		2
78	1SS-3C-073	Limit Paddle Assembly		1
78-1	1SS-3C-07301	Side Plate		2
78-2	1SS-3C-07302	Chain Guide Block		1
78-3	1SS-3C-07303	Chain Guide Shaft		1
79	1SS-3C-074	Limit Spring		2
80	1SS-3C-075	Load Chain for 1T, 2T, 3T,and 5T *	Ø 8x24mm	1
81	1SS-3C-076	Retainer Ring		1

** Specify length of Load Chain when ordering.*

82	1SS-3C-077	Chain Stop		1
83	1SS-3C-078	Pin		1
84	5SS-3C-079	Bottom Hook Assembly for 5T		1
85	2SS-3C-08007	Pin		1
86	1/2SS-3C-010	Plain Washer	10mm	1
87	1SS-3C-08009	Slotted Hex Nut	M10	1
88	5SS-3C-088	Cotton Pin	2.5x20	1
89	5SS-3C-08006	Chain Holder		1
90	1SS-3C-081	Phillips Pan Head Machine Screw	M8x16	1
91	1/2SS-3C-082	Lock Washer	8mm	1
92	1/2SS-3C-053	Plain Washer	8mm	1
93	1/2SS-1C-085	Electric Component Board for 1 Phase		1
	1/2SS-3C-085	Electric Component Board for 3 Phase		1
94	1/2SS-3C-086	Volts Conversion (for 3 Phase Single Speed)		1
	1/2DS-3C-086A	Volts Conversion (for 3 Phase Dual Speed)		1
95	1/2SS-3C-047	Phillips Pan Head Machine Screw (for 1 Phase only) M4x6		1
96	TS-2361041	Lock Washer (for 1 Phase only)	4mm	1
97	TS-1550021	Plain Washer (for 1 Phase only)	4mm	1
98	1/2SS-3C-090UG	Female Connector for Push Button Cord	7P	1
99	1/2SS-3C-091UG	Quick Connector Board		1
100	1/2SS-3C-092UG	Female Connector for Power Cord	4P	1
101	1SS-1C-093	Contactor Holder for 1 Phase		1
	1/2SS-3C-093	Contactor Holder for 3 Phase		1
102	TS-2284082	Phillips Pan Head Machine Screw	M4x8	2
103	TS-2361041	Lock Washer	4mm	2
104	TS-1550021	Plain Washer	4mm	2
105	1/2SS-1C-097UG	Magnetic Contactor for 1 Phase		2
	1/2SS-3C-097UG	Magnetic Contactor for 3 Phase (Single Speed 2pcs, Dual Speed 4Pcs)		
106	1/2SS-3C-098	Reverse Phase Inspector (3 Phase only)	230V/460V/3Ph/60Hz	1
107	1SS-3C-102UG	Motor Side Cover		1
108	1/2SS-3C-103UG	Phillips Pan Head Machine Screw	M3x12	8
109	1/2SS-3C-104	Pushbutton Control for 1 Phase and 3 Phase, Single Speed		1
	1/2DS-3C-104	Pushbutton Control for 3 Phase, Dual Speed		1
110	1/2SS-3C-105UG	Male Plug	7P	1
111	1/2SS-3C-106	Cable Holder		1
112	1/2SS-3C-022	Lock Nut	M6	1
113	5SS-3C-108	ID Label for 5T		1
114	1/2SS-3C-109	Phillips Pan Head Machine Screw	M3x6	4
115	1/2SS-3C-110	Lock Washer	3mm	12
116	1/2SS-3C-111	Plain Washer	3mm	12
117	1/2SS-1C-099-A	Solid State Switch (1 Phase only)		1
118	TS-2284352	Phillips Pan Head Machine Screw	M4x35	2
119	1/2SS-1C-101	Capacitor (for 1 Phase only)	Ø65, 600uF	1
120	1/2SS-1C-113	Capacitor Holder (for 1 Phase only)	Ø 65	1
121	1/2SS-1C-114	Rectifier (for 1 Phase only)	50A	1
122	1SS-1C-112	First Gear Shaft Assembly (for 1 Phase only)		1
123	1/2SS-3C-123UG	Male Plug	4P	1
128	1/2SS-3C-128	Lock Nut	M3	8
129	1SS-3C-129	Chain Guide		1
130	1/2SS-3C-130	Fuse	2A	1
131	1/2SS-3C-131	Fuse Cover		1

Hook Assemblies (1/2-Ton, 1-Ton and 2-Ton)

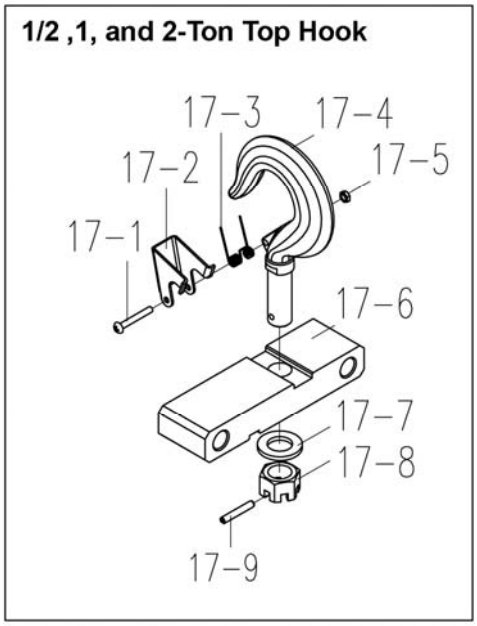

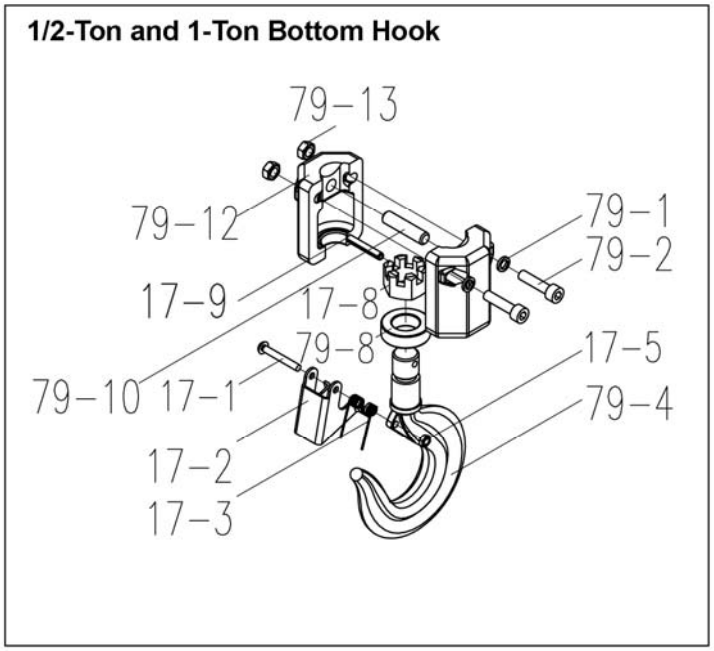

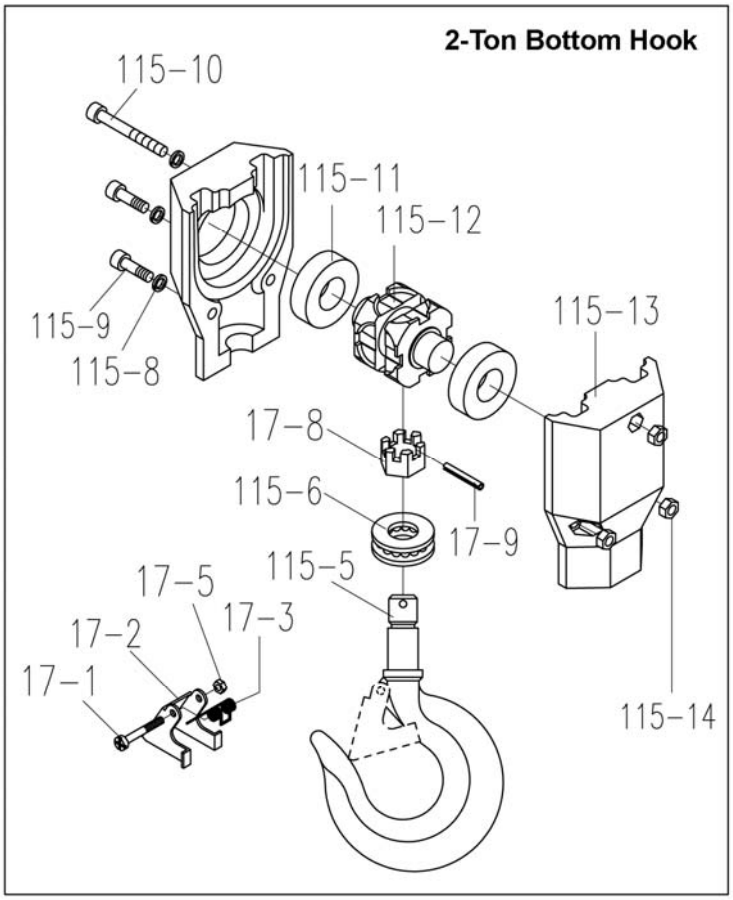

Parts List: Hook Assemblies (1/2-Ton only)

Index No.	Part No.	Description	Size	Qty
17	1/2SS-3C-017	Top Hook Assembly for 1/2 Ton		1
17-1	TS-2284302	Phillips Pan Head Machine Screw	M4x30	1
17-2	1/2SS-3C-01702	Hook Latch		1
17-3	1/2SS-3C-01703	Latch Spring		1
17-4	1/2SS-3C-01704	Top Hook		1
17-5	1/2SS-3C-01705	Lock Nut	M4	1
17-6	1/2SS-3C-01706	Connecting Bar		1
17-7	1/2SS-3C-01707	Plain Washer	16mm	1
17-8	1/2SS-3C-01708	Slotted Hex Nut	M16	1
17-9	1/2SS-3C-01709	Roll Pin	4x28mm	1
79	1/2SS-3C-079	Bottom Hook Assembly for 1/2 Ton		1
17-0	1/2SS-3C-01700	Hook Latch Assembly (index # 17-1,17-2,17-3,17-5)		1
17-1	TS-2284302	Phillips Pan Head Machine Screw	M4x30	1
17-2	1/2SS-3C-01702	Hook Latch		1
17-3	1/2SS-3C-01703	Latch Spring		1
17-5	1/2SS-3C-01705	Lock Nut	M4	1
17-8	1/2SS-3C-01708	Slotted Hex Nut	M16	1
17-9	1/2SS-3C-01709	Roll Pin	4x28mm	1
79-1	1/2SS-3C-012	Lock Washer	6mm	2
79-2	1/2SS-3C-066	Socket Head Cap Screw	M6x25	2
79-4	1/2SS-3C-07904	Bottom Hook		1
79-8	1/2SS-3C-07908	Thrust Ball Bearing	8103	1
79-10	1/2SS-3C-078	Bottom Hook Pin		1
79-12	1/2SS-3C-07912	Bottom Hook Housing		2
79-13	1/2SS-3C-022	Lock Nut	M6	2

Parts List: Hook Assemblies (1-Ton only)

Index No.	Part No.	Description	Size	Qty
17	1SS-3C-017	Top Hook Assembly for 1 Ton		1
17-1	TS-2284302	Phillips Pan Head Machine Screw	M4x30	1
17-2	1SS-3C-01702	Hook Latch		1
17-3	1SS-3C-01703	Latch Spring		1
17-4	1SS-3C-01704	Top Hook		1
17-5	1/2SS-3C-01705	Lock Nut	M4	1
17-6	1SS-3C-01706	Connecting Bar		1
17-7	1/2SS-3C-01707	Plain Washer	16mm	1
17-8	1/2SS-3C-01708	Slotted Hex Nut	M16	1
17-9	1/2SS-3C-01709	Roll Pin	M4x28	1
79	1SS-3C-079	Bottom Hook Assembly for 1 Ton		1
17-0	1SS-3C-01700	Hook Latch Assembly (index #17-1,17-2,17-3,17-5)		1
17-1	TS-2284302	Phillips Pan Head Machine Screw	M4x30	1
17-2	1SS-3C-01702	Hook Latch		1
17-3	1SS-3C-01703	Latch Spring		1
17-5	1/2SS-3C-01705	Lock Nut	M4	1
17-8	1/2SS-3C-01708	Slotted Hex Nut	M16	1
17-9	1/2SS-3C-01709	Roll Pin	4x28mm	1
79-1	1/2SS-3C-082	Lock Washer	8mm	2
79-2	1SS-3C-07902	Socket Head Cap Screw	M8x35	2
79-4	1SS-3C-07904	Bottom Hook		1
79-8	1SS-3C-07908	Thrust Ball Bearing	8203	1
79-10	1SS-3C-078	Bottom Hook Pin		1
79-12	1SS-3C-07912	Bottom Hook Housing		2
79-13	1SS-3C-07913	Lock Nut	M8	2

Parts List: Hook Assemblies (2-Ton only)

Exploded view on page 38.

Index No.	Part No.	Description	Size	Qty
17	2SS-3C-017	Top Hook Assembly for 2 Ton		1
17-1	2SS-3C-01701	Phillips Pan Head Machine Screw	M4x40	1
17-2	2SS-3C-01702	Hook Latch		1
17-3	2SS-3C-01703	Latch Spring		1
17-4	2SS-3C-01704	Top Hook		1
17-5	1/2SS-3C-01705	Lock Nut	M4	1
17-6	2SS-3C-01706	Connecting Bar		1
17-7	2SS-3C-01707	Plain Washer	20mm	1
17-8	2SS-3C-01708	Slotted Hex Nut	M20	1
17-9	2SS-3C-01709	Roll Pin	4x30mm	1
115	2SS-3C-115	Bottom Hook Assembly for 2 Ton		1
17-0	2SS-3C-01700	Hook Latch Assembly (index #17-1,17-2,17-3,17-5)		1
17-1	2SS-3C-01701	Phillips Pan Head Machine Screw	M4x40	1
17-2	2SS-3C-01702	Hook Latch		1
17-3	2SS-3C-01703	Latch Spring		1
17-5	1/2SS-3C-01705	Lock Nut	M4	1
17-8	2SS-3C-01708	Slotted Hex Nut	M20	1
17-9	2SS-3C-01709	Roll Pin	4x30mm	1
115-5	2SS-3C-11505	Bottom Hook		1
115-6	2SS-3C-11506	Thrust Ball Bearing	8204	1
115-8	1/2SS-3C-082	Lock Washer	8mm	2
115-9	2SS-3C-11509	Socket Head Cap Screw	M8x25	2
115-10	2SS-3C-11510	Socket Head Cap Screw	M8x65	1
115-11	2SS-3C-11511	Ball Bearing	6305ZZ	2
115-12	2SS-3C-11512	Sheave		1
115-13	2SS-3C-11513	Bottom Hook Housing		2
115-14	1SS-3C-07913	Lock Nut	M8	2

Hook Assemblies (3-Ton only)

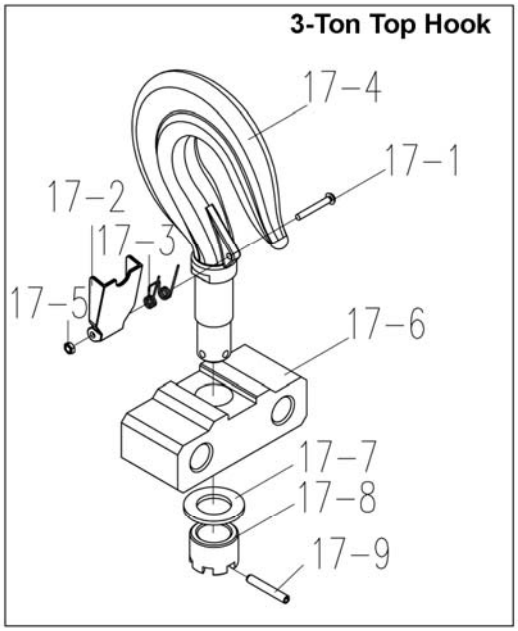

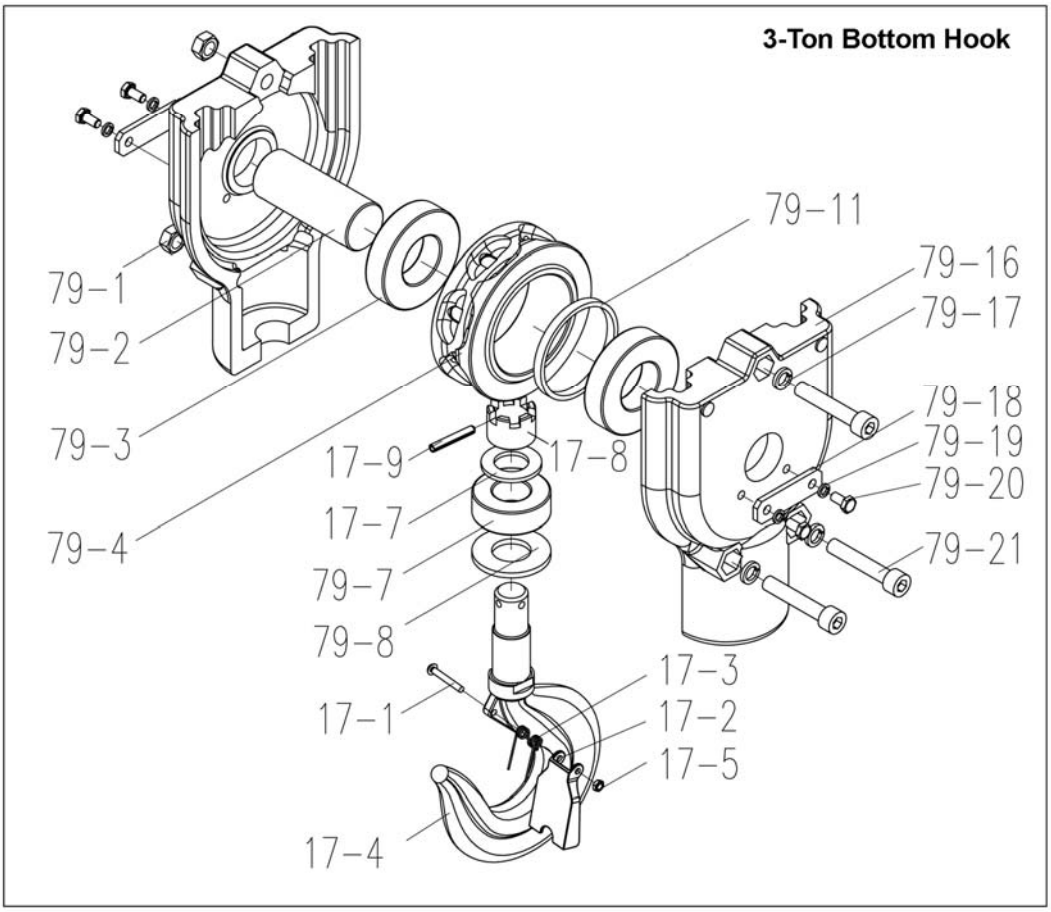

Parts List: Hook Assemblies (3-Ton only)

Exploded view on page 41.

Index No.	Part No.	Description	Size	Qty
17	3SS-3C-017	Top Hook Assembly for 3-Ton		1
17-1	TS-2284302	Phillips Pan Head Machine Screw	M4x30	1
17-2	3SS-3C-01702	Hook Latch		1
17-3	3SS-3C-01703	Latch Spring		1
17-4	3SS-3C-01704	Top Hook		1
17-5	1/2SS-3C-01705	Lock Nut	M4	1
17-6	3SS-3C-01706	Connecting Bar		1
17-7	3SS-3C-01707	Collar		1
17-8	3SS-3C-01708	Hook Nut		1
17-9	3SS-3C-01709	Roll Pin	5x35mm	1
79	3SS-3C-079	Bottom Hook Assembly for 3-Ton		1
17-0	3SS-3C-01700	Hook Latch Assembly (index #17-1,17-2,17-3,17-5)		1
17-1	TS-2284302	Phillips Pan Head Machine Screw	M4x30	1
17-2	3SS-3C-01702	Hook Latch		1
17-3	3SS-3C-01703	Latch Spring		1
17-5	1/2SS-3C-01705	Lock Nut	M4	1
17-7	3SS-3C-01707	Collar		1
17-8	3SS-3C-01708	Hook Nut		1
17-9	3SS-3C-01709	Roll Pin	5x35mm	1
79-1	3SS-3C-07901	Lock Nut	M10	3
79-2	3SS-3C-07902	Sheave Shaft		1
79-3	3SS-3C-07903	Ball Bearing	180207kz1	2
79-4	3SS-3C-07904	Sheave		1
79-7	3SS-3C-07907	Thrust Ball Bearing	8305	1
79-8	3SS-3C-07908	Collar		1
79-11	3SS-3C-07911	Collar		1
79-16	3SS-3C-07916	Bottom Hook Housing		2
79-17	1/2SS-3C-009	Lock Washer	10mm	3
79-18	3SS-3C-087	Sheave Shaft Block		2
79-19	1/2SS-3C-012	Lock Washer	6mm	4
79-20	3SS-3C-07922	Hex Bolt	M6x12	4
79-21	3SS-3C-07921	Socket Head Cap Screw	M10x55	3

Parts List: Hook Assemblies (5-Ton only)

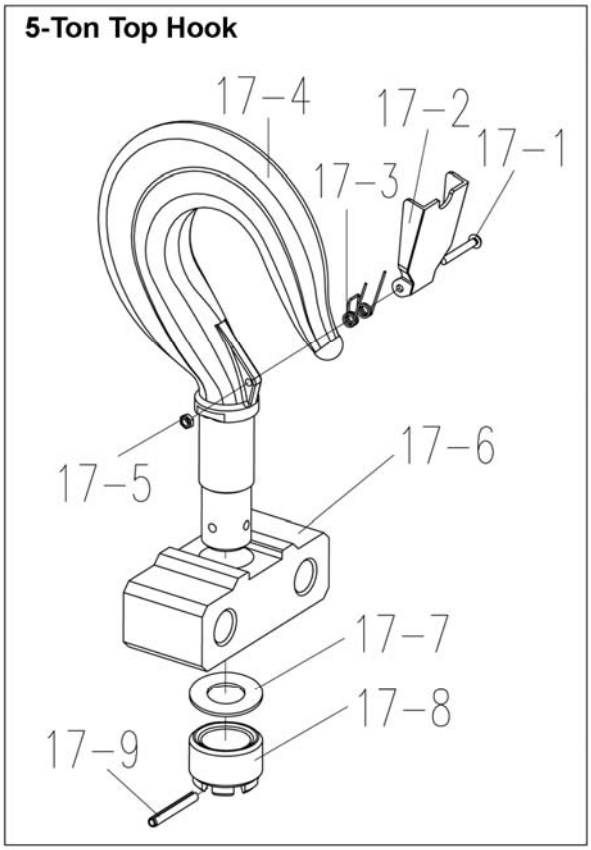

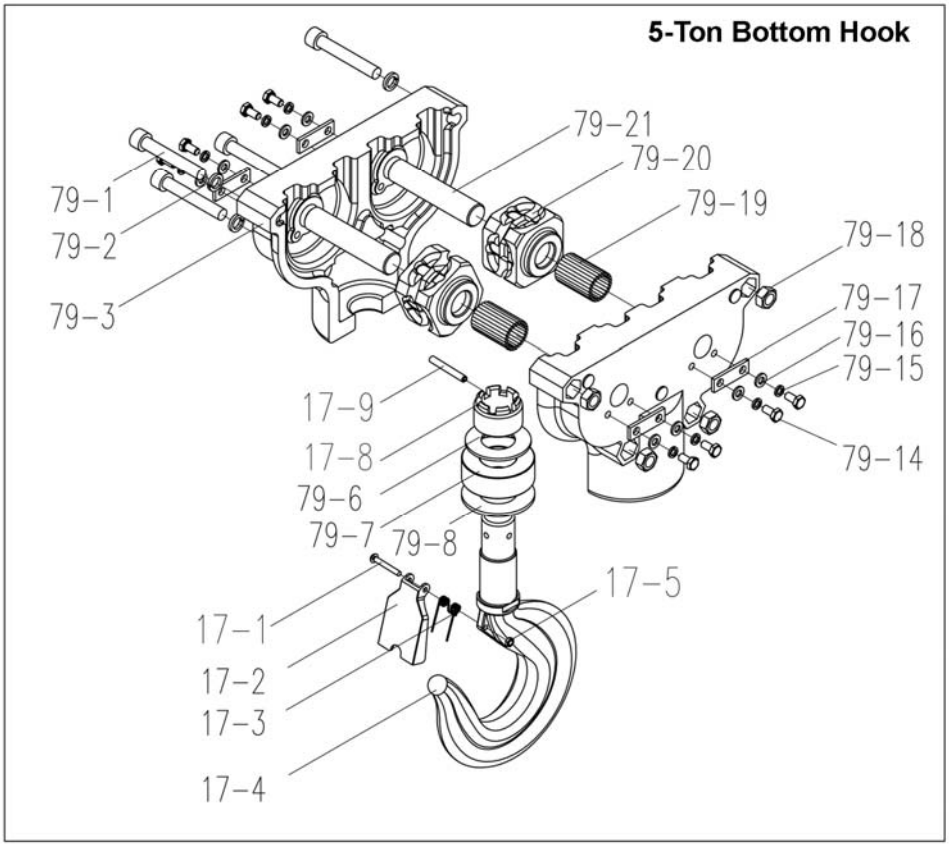

Parts List: Hook Assemblies (5-Ton only)

Exploded view on page 43.

Index No.	Part No.	Description	Size	Qty
17	5SS-3C-017	Top Hook Assembly for 5 Ton		1
17-1	TS-2284302	Phillips Pan Head Machine Screw	M4x30	1
17-2	5SS-3C-01702	Hook Latch		1
17-3	5SS-3C-01703	Latch Spring		1
17-4	5SS-3C-01704	Top Hook		1
17-5	5SS-3C-01705	Lock Nut	M4	1
17-6	5SS-3C-01706	Connecting Bar		1
17-7	5SS-3C-01707	Plain Washer		1
17-8	5SS-3C-01708	Hook Nut		1
17-9	5SS-3C-01709	Roll Pin	5x40mm	1
79	5SS-3C-079	Bottom Hook Assembly for 5 Ton		1
79-1	5SS-3C-07901	Socket Head Cap Screw	M10x65	4
79-2	1/2SS-3C-009	Lock Washer	10mm	4
79-3	5SS-3C-07903	Bottom Hook Housing		2
79-6	5SS-3C-07906	Plain Washer		1
79-7	5SS-3C-07907	Thrust Ball Bearing	8306	1
79-8	5SS-3C-07908	Collar		1
17-0	5SS-3C-01700	Hook Latch Assembly (index #17-1,17-2,17-3,17-5)		1
17-1	TS-2284302	Phillips Pan Head Machine Screw	M4x30	1
17-2	5SS-3C-01702	Hook Latch		1
17-3	5SS-3C-01703	Latch Spring		1
17-4	5SS-3C-01704	Top Hook		1
17-5	1/2SS-3C-01705	Lock Nut	M4	1
17-8	5SS-3C-01708	Hook Nut		1
17-9	5SS-3C-01709	Roll Pin	5x40mm	1
79-14	3SS-3C-07922	Hex Bolt	M6x12	8
79-15	1/2SS-3C-012	Lock Washer	6mm	8
79-16	1/2SS-3C-011	Plain Washer	6mm	8
79-17	3SS-3C-061	Hinge Plate		4
79-18	3SS-3C-07901	Lock Nut	M10	4
79-19	3SS-3C-083	Needle	3x39.8b	48
79-20	3SS-3C-088	Sheave		2
79-21	5SS-3C-07921	Sheave Shaft		2

Electrical Connections: Single Phase Only

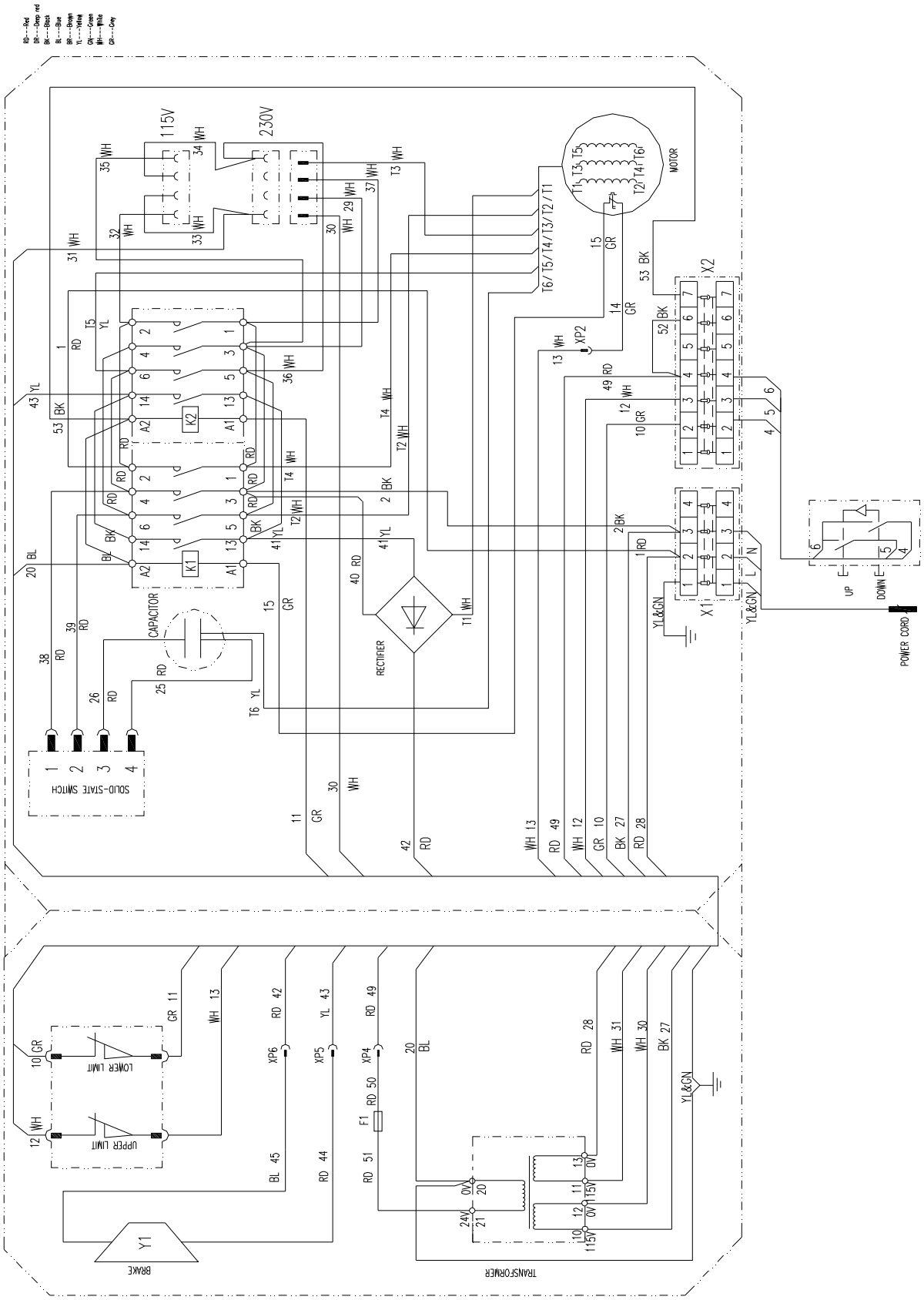

WIRING DIAGRAM FOR ELECTRIC HOISTS IN 1 PHASE WITH SINGLE SPEED

Electrical Connections: 3-Phase, Single Speed Only

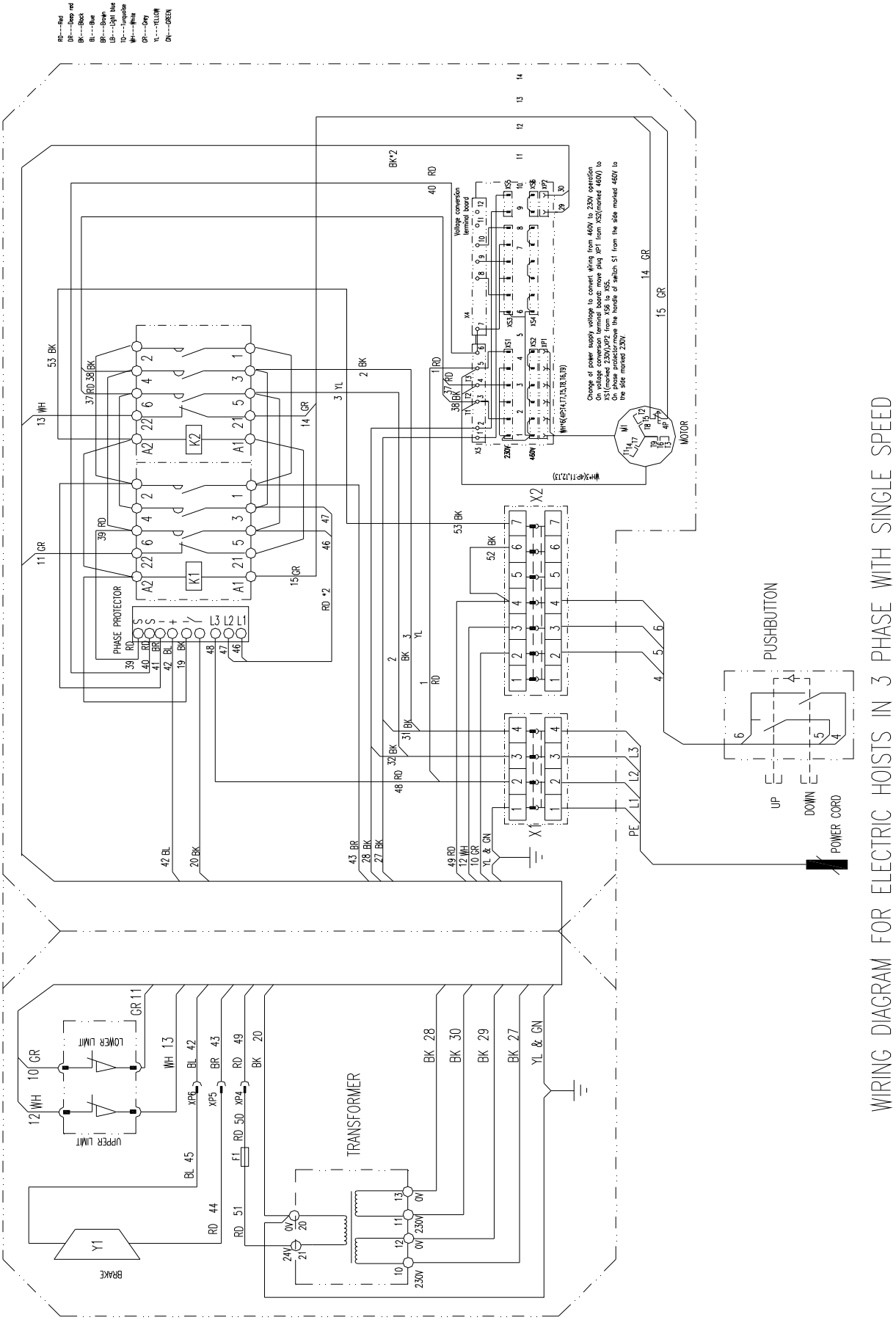

WIRING DIAGRAM FOR ELECTRIC HOISTS IN 3 PHASE WITH SINGLE SPEED

Electrical Connections: 3-Phase, Dual Speed Only

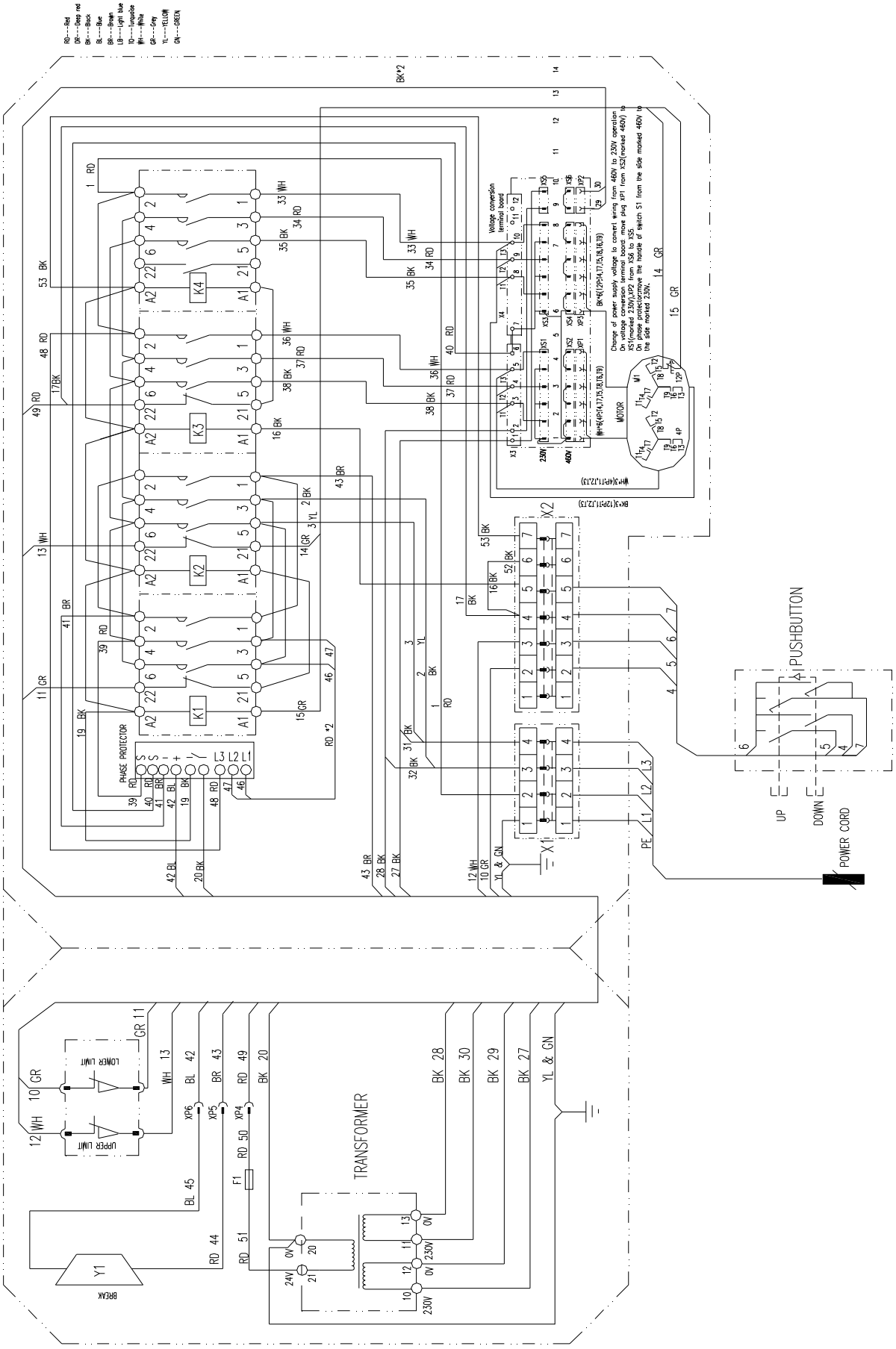

WIRING DIAGRAM FOR ELECTRIC HOISTS IN 3 PHASE WITH DUAL SPEED

TEST CERTIFICATE

COMMODITY	Chain Hoist
MODEL	
SERIAL NO.	
CAPACITY	ton
TEST LOAD	ton
LIFT	ft.
DATE OF INSPECTION	
JUDGEMENT	PASSED
INSPECTOR	

WALTER MEIER (Manufacturing) Inc.
427 New Sanford Road
LaVergne, Tennessee 37086
Phone: 800-274-6848
www.waltermeier.com