WIRING INSTRUCTIONS

TITLE **LARGE DRILL POWER UNIT**

BULLETIN **58-01-0370**

MILWAUKEE ELECTRIC TOOL CORP. 13135 WEST LISBON RD. BROOKFIELD, WIS

Date July '69

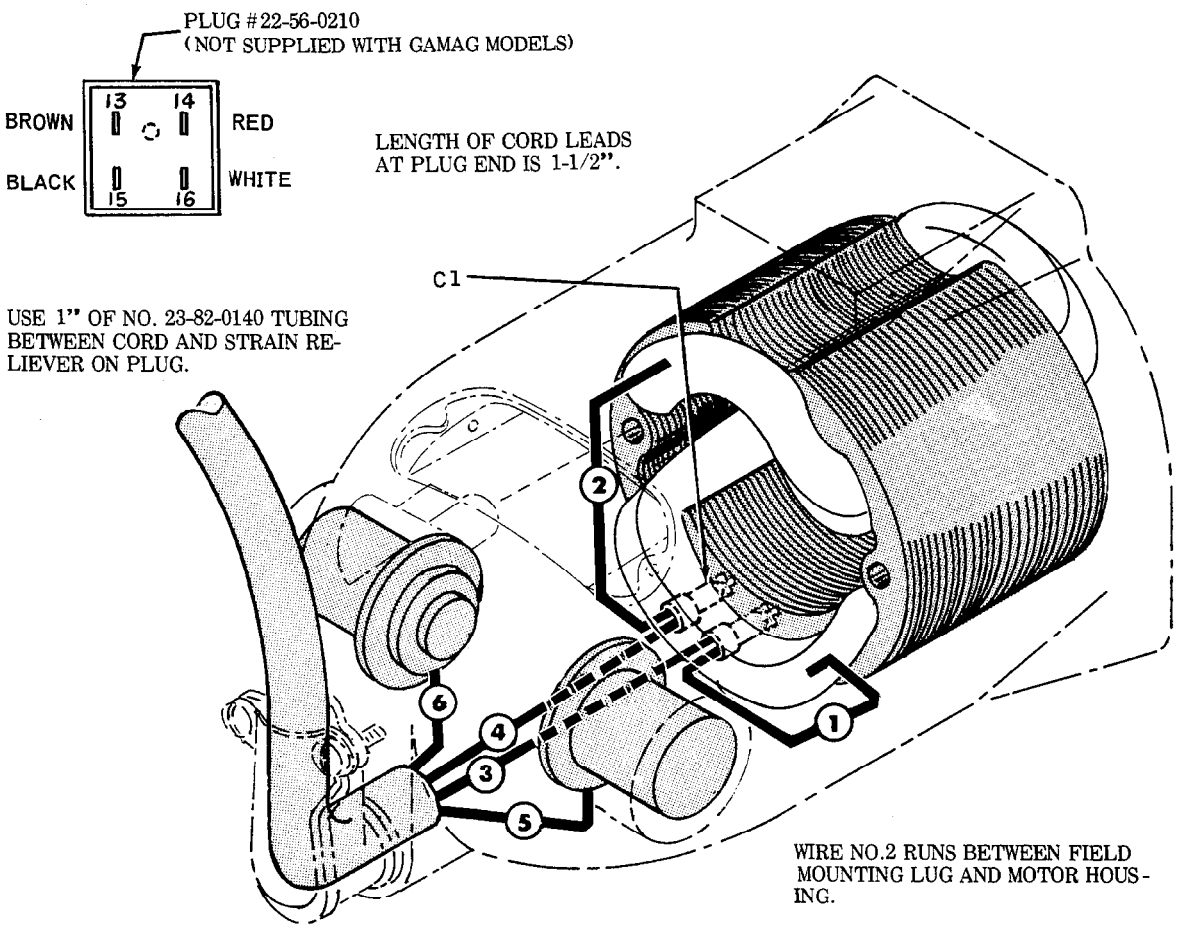

NOTE:
ALL LEADS MUST BE HELD TO ± 1/8"
ALL FIELD LEADS TO BE MEASURED FROM AND PERPENDICULAR TO LAMINATIONS.
ALL LEAD LENGTHS ARE BEFORE STRIPPING.

WHERE TERMINAL AND CONNECTOR COMBINATIONS ARE SPECIFIED, SEE ELECTRICAL PARTS CHART FOR PART NO. AND QUANTITY AND DRAWING FOR ACTUAL HOOK-UP

WIRING SPECIFICATIONS

Wire Color	Wire No.	Ga.	Lgth. in.	Terminal T1	Terminal T2	Terminal T3	Terminal T4	Connector C1	Connector C2	Connector C3	Connector C4	Wire Color	Wire No.	Ga.	Lgth. in.	Terminal T1	Terminal T2	Terminal T3	Terminal T4	Connector C1	Connector C2	Connector C3	Connector C4
Yellow	1	Fld.	3-3/4					X															
Black	2	Fld.	6-1/2					X															
White	3	Cord	2																				
Black	4	Cord	2																				
Red	5	Cord	3-3/4																				
Brown	6	Cord	3-3/4																				

Electrical Parts

TERMINAL DESCRIPTION

Code	Part No.	Qnty.

CONNECTOR DESCRIPTION

Code	Part No.	Qnty.
C1	22-56-0160	2

SWITCH DESCRIPTION

Code	Part No.	Qnty.
	NONE	

Form OE-24