# 16/20/22 kW

GENERAC®

## GUARDIAN® SERIES
### Residential Standby Generators
### Air-Cooled Gas Engine

INCLUDES:

- True Power™ Electrical Technology
- Two Line LCD Multilingual Digital Evolution™ Controller (English/Spanish/French/Portuguese)
- Two Transfer Switch Options Available: 100 Amp, 16 Circuit Switch or 200 Amp Service Rated Smart Switch. See Page 4 for Details.
- Electronic Governor
- Standard Wi-Fi™ Remote Monitoring
- System Status & Maintenance Interval LED Indicators
- Sound Attenuated Enclosure
- Flexible Fuel Line Connector
- Direct-To-Dirt Composite Mounting Pad
- Natural Gas or LP Gas Operation
- 5 Year Limited Warranty
- Listed and Labeled by the Southwest Research Institute allowing installation as close as 18" (457 mm) to a structure.*
  **Must be located away from doors, windows, and fresh air intakes and in accordance with local codes.*
  *https://assets.swri.org/library/DirectoryOfListedProducts/ConstructionIndustry/973_DoC_204_13204-01-01_Rev8.pdf*

Standby Power Rating

Models G007036-1, G007037-1 (Aluminum - Bisque) - 16 kW 60 Hz
Model G007035-1 (Aluminum - Bisque) - 16 kW 60 Hz
Models G007039-1, G007038-1 (Aluminum - Bisque) - 20 kW 60 Hz
Models G007043-2, G007042-2 (Aluminum - Bisque) - 22 kW 60 Hz

c UL us LISTED QUIET TEST™ Mobile Link

Note: CUL certification only applies to unbundled units and units packaged with limited circuit switches. Units packaged with the Smart Switch are UL certified in the USA only.

## FEATURES

- **INNOVATIVE ENGINE DESIGN & RIGOROUS TESTING** are at the heart of Generac's success in providing the most reliable generators possible. Generac's G-Force engine lineup offers added peace of mind and reliability for when you need it the most. The G-Force series engines are purpose built and designed to handle the rigors of extended run times in high temperatures and extreme operating conditions.
- **TRUE POWER™ ELECTRICAL TECHNOLOGY:** Superior harmonics and sine wave form produce less than 5% Total Harmonic Distortion for utility quality power. This allows confident operation of sensitive electronic equipment and micro-chip based appliances, such as variable speed HVAC systems.
- **TEST CRITERIA:**
  - √ **PROTOTYPE TESTED**
  - √ **SYSTEM TORSIONAL TESTED**
  - √ **NEMA MG1-22 EVALUATION**
  - √ **MOTOR STARTING ABILITY**
- **MOBILE LINK™ REMOTE MONITORING:** FREE with every Guardian Series Home standby generator. Allows you to monitor the status of your generator from anywhere in the world using a smartphone, tablet, or PC. Easily access information such as the current operating status and maintenance alerts. Connect your account to your authorized service dealer for fast, friendly and proactive service. With Mobile Link, you are taken care of before the next power outage.
- **SOLID-STATE, FREQUENCY COMPENSATED VOLTAGE REGULATION:** This state-of-the-art power maximizing regulation system is standard on all Generac models. It provides optimized FAST RESPONSE to changing load conditions and MAXIMUM MOTOR STARTING CAPABILITY by electronically torque-matching the surge loads to the engine. Digital voltage regulation at ±1%.
- **SINGLE SOURCE SERVICE RESPONSE** from Generac's extensive dealer network provides parts and service know-how for the entire unit, from the engine to the smallest electronic component.
- **GENERAC TRANSFER SWITCHES:** Long life and reliability are synonymous with GENERAC POWER SYSTEMS. One reason for this confidence is that the GENERAC product line includes its own transfer systems and controls for total system compatibility.

THE GENERAC PROMISE

USA ENGINEERED & BUILT* · 24/7 • 365 CUSTOMER CARE · FIVE YEAR LIMITED 5 WARRANTY · Mobile Link™ · ISO 9001:2008

* Assembled in the USA using domestic and foreign parts.

GENERAC®

# 16/20/22 kW features and benefits

## Engine

| | |
|---|---|
| Generac G-Force design | Maximizes engine "breathing" for increased fuel efficiency. Plateau honed cylinder walls and plasma moly rings helps the engine run cooler, reducing oil consumption resulting in longer engine life. |
| "Spiny-lok" cast iron cylinder walls | Rigid construction and added durability provide long engine life. |
| Electronic ignition/spark advance | These features combine to assure smooth, quick starting every time. |
| Full pressure lubrication system | Pressurized lubrication to all vital bearings means better performance, less maintenance and longer engine life. Now featuring up to a 2 year/200 hour oil change interval. |
| Low oil pressure shutdown system | Shutdown protection prevents catastrophic engine damage due to low oil. |
| High temperature shutdown | Prevents damage due to overheating. |

## Generator

| | |
|---|---|
| Revolving field | Allows for a smaller, light weight unit that operates 25% more efficiently than a revolving armature generator. |
| Skewed stator | Produces a smooth output waveform for compatibility with electronic equipment. |
| Displaced phase excitation | Maximizes motor starting capability. |
| Automatic voltage regulation | Regulates the output voltage to ±1% prevents damaging voltage spikes. |
| UL 2200 listed | For your safety. |

## Transfer Switch (if applicable)

| | |
|---|---|
| Fully automatic | Transfers your vital electrical loads to the energized source of power. |
| NEMA 3R | Can be installed inside or outside for maximum flexibility. |
| Remote mounting | Mounts near your existing distribution panel for simple, low-cost installation. |

## Evolution™ Controls

| | |
|---|---|
| Auto/Manual/Off illuminated buttons | Selects the operating mode and provides easy, at-a-glance status indication in any condition. |
| Two-line LCD multilingual display | Provides homeowners easily visible logs of history, maintenance and events up to 50 occurrences. |
| Sealed, raised buttons | Smooth, weather-resistant user interface for programming and operations. |
| Utility voltage sensing | Constantly monitors utility voltage, setpoints 65% dropout, 80% pick-up, of standard voltage. |
| Generator voltage sensing | Constantly monitors generator voltage to ensure the cleanest power delivered to the home. |
| Utility interrupt delay | Prevents nuisance start-ups of the engine, adjustable 2-1500 seconds from the factory default setting of 5 seconds by a qualified dealer. |
| Engine warm-up | Ensures engine is ready to assume the load, setpoint approximately 5 seconds. |
| Engine cool-down | Allows engine to cool prior to shutdown, setpoint approximately 1 minute. |
| Programmable exercise | Operates engine to prevent oil seal drying and damage between power outages by running the generator for 5 minutes every other week. Also offers a selectable setting for weekly or monthly operation providing flexibility and potentially lower fuel costs to the owner. |
| Smart battery charger | Delivers charge to the battery only when needed at varying rates depending on outdoor air temperature. Compatible with lead acid and AGM-style batteries. |
| Main line circuit breaker | Protects generator from overload. |
| Electronic governor | Maintains constant 60 Hz frequency. |

## Unit

| | |
|---|---|
| SAE weather protective enclosure | Sound attenuated enclosures ensure quiet operation and protection against mother nature, withstanding winds up to 150 mph. Hinged key locking roof panel for security. Lift-out front for easy access to all routine maintenance items. Electrostatically applied textured epoxy paint for added durability. |
| Enclosed critical grade muffler | Quiet, critical grade muffler is mounted inside the unit to prevent injuries. |
| Small, compact, attractive | Makes for an easy, eye appealing installation, as close as 18" away from a building. |

## Installation System

| | |
|---|---|
| 1 ft (305 mm) flexible fuel line connector | Absorbs any generator vibration when connected to rigid pipe. |
| Direct-to-dirt composite mounting pad | Complex lattice design prevents settling or sinking of the generator system. |
| Integral sediment trap | Prevents particles and moisture from entering the fuel regulator and engine, prolonging engine life. |

## Remote Monitoring

| | |
|---|---|
| Ability to view generator status | Monitor your generator via your smartphone, tablet, or computer at any time via the Mobile Link application for complete peace of mind |
| Ability to view generator Exercise/Run and Total Hours | Review the generator's complete protection profile for exercise hours and total hours |
| Ability to view generator maintenance information | Provides maintenance information for your specific model generator when scheduled maintenance is due |
| Monthly report with previous month's activity. | Detailed monthly reports provide historical generator information |
| Ability to view generator battery information | Built in battery diagnostics displaying current state of the battery |
| Weather information | Provides detailed local ambient weather conditions for generator location |

GENERAC®

# 16/20/22 kW

specifications

## Generator

| Model | G007035-1, G007036-1, G007037-1 (16 kW) | G007038-1, G007039-1 (20 kW) | G007042-2, G007043-2 (22 kW) |
|---|---|---|---|
| Rated Maximum Continuous Power Capacity (LP) | 16,000 Watts* | 20,000 Watts* | 20,000 Watts* |
| Rated Maximum Continuous Power Capacity (NG) | 16,000 Watts* | 18,000 Watts* | 19,500 Watts * |
| Rated Voltage | 240 | 240 | 240 |
| Rated Maximum Continuous Load Current – 240 Volts (LP/NG) | 66.7/66.7 | 83.3/75.0 | 91.7/81.3 |
| Total Harmonic Distortion | Less than 5% | Less than 5% | Less than 5% |
| Main Line Circuit Breaker | 70 Amp | 90 Amp | 100 Amp |
| Phase | 1 | 1 | 1 |
| Number of Rotor Poles | 2 | 2 | 2 |
| Rated AC Frequency | 60 Hz | 60 Hz | 60Hz |
| Power Factor | 1.0 | 1.0 | 1.0 |
| Battery Requirement (not included) | 12 Volts, Group 26R 540 CCA Minimum or Group 35AGM 650 CCA Minimum | | |
| Unit Weight (lb/kg) | 409/186 | 448/203 | 466/211 |
| Dimensions (L x W x H) in/mm | 48 x 25 x 29/1218 x 638 x 732 | | |
| Sound output in dB(A) at 23 ft (7 m) with generator operating at normal load** | 66 | 66 | 67 |
| Sound output in dB(A) at 23 ft (7 m) with generator in Quiet-Test™ low-speed exercise mode** | 58 | 58 | 58 |
| Exercise duration | 5 min | 5 min | 5 min |

## Engine

| | | | |
|---|---|---|---|
| Type of Engine | GENERAC G-Force 1000 Series | | |
| Number of Cylinders | 2 | 2 | 2 |
| Displacement | 999 cc | 999 cc | 999 cc |
| Cylinder Block | Aluminum w/ Cast Iron Sleeve | | |
| Valve Arrangement | Overhead Valve | Overhead Valve | Overhead Valve |
| Ignition System | Solid-state w/ Magneto | Solid-state w/ Magneto | Solid-state w/ Magneto |
| Governor System | Electronic | Electronic | Electronic |
| Compression Ratio | 9.5:1 | 9.5:1 | 9.5:1 |
| Starter | 12 VDC | 12 VDC | 12 VDC |
| Oil Capacity Including Filter | Approx. 1.9 qt/1.8 L | Approx. 1.9 qt/1.8 L | Approx. 1.9 qt/1.8 L |
| Operating rpm | 3,600 | 3,600 | 3,600 |
| Fuel Consumption | | | |
| Natural Gas ft³/hr (m³/hr) | | | |
| 1/2 Load | 218 (6.17) | 204 (5.78) | 228 (6.46) |
| Full Load | 309 (8.75) | 301 (8.52) | 327 (9.26) |
| Liquid Propane ft³/hr (gal/hr) [l/hr] | | | |
| 1/2 Load | 74 (2.03) [7.70] | 87 (2.37) [8.99] | 92 (2.53) [9.57] |
| Full Load | 107 (2.94) [11.11] | 130 (3.56) [13.48] | 142 (3.90) [14.77] |

Note: **Fuel pipe must be sized for full load.** Required fuel pressure to generator fuel inlet at all load ranges - 3.5-7" water column (7-13 mm mercury) for natural gas, 10-12" water column (19-22 mm mercury) for LP gas. For BTU content, multiply $ft^3$/hr x 2500 (LP) or $ft^3$/hr x 1000 (NG). For Megajoule content, multiply $m^3$/hr x 93.15 (LP) or $m^3$/hr x 37.26 (NG)

## Controls

| | |
|---|---|
| Two-Line Plain Text Multilingual LCD Display | Simple user interface for ease of operation. |
| Mode Buttons:Auto | Automatic Start on Utility failure. 7 day exerciser. |
| Manual | Start with starter control, unit stays on. If utility fails, transfer to load takes place. |
| Off | Stops unit. Power is removed. Control and charger still operate. |
| Ready to Run/Maintenance Messages | Standard |
| Engine Run Hours Indication | Standard |
| Programmable start delay between 2-1500 seconds | Standard (programmable by dealer only) |
| Utility Voltage Loss/Return to Utility Adjustable (Brownout Setting) | From 140-171 V/190-216 V |
| Future Set Capable Exerciser/Exercise Set Error Warning | Standard |
| Run/Alarm/Maintenance Logs | 50 Events Each |
| Engine Start Sequence | Cyclic cranking: 16 sec on, 7 rest (90 sec maximum duration). |
| Starter Lock-out | Starter cannot re-engage until 5 sec after engine has stopped. |
| Smart Battery Charger | Standard |
| Charger Fault/Missing AC Warning | Standard |
| Low Battery/Battery Problem Protection and Battery Condition Indication | Standard |
| Automatic Voltage Regulation with Over and Under Voltage Protection | Standard |
| Under-Frequency/Overload/Stepper Overcurrent Protection | Standard |
| Safety Fused/Fuse Problem Protection | Standard |
| Automatic Low Oil Pressure/High Oil Temperature Shutdown | Standard |
| Overcrank/Overspeed (@ 72 Hz)/rpm Sense Loss Shutdown | Standard |
| High Engine Temperature Shutdown | Standard |
| Internal Fault/Incorrect Wiring Protection | Standard |
| Common External Fault Capability | Standard |
| Field Upgradable Firmware | Standard |

**Sound levels are taken from the front of the generator. Sound levels taken from other sides of the generator may be higher depending on installation parameters. Rating definitions - Standby: Applicable for supplying emergency power for the duration of the utility power outage. No overload capability is available for this rating. (All ratings in accordance with BS5514, ISO3046 and DIN6271). * Maximum kilovolt amps and current are subject to and limited by such factors as fuel Btu/megajoule content, ambient temperature, altitude, engine power and condition, etc. Maximum power decreases about 3.5 percent for each 1,000 feet (304.8 meters) above sea level; and also will decrease about 1 percent for each 6 °C (10 °F) above 16 °C (60 °F).

# 16/20/22 kW

# switch options

## Limited Circuits Switch Features

- 16 space, 24 circuit, breakers not included.
- Electrically operated, mechanically-held contacts for fast, positive connections
- Rated for all classes of load, 100% equipment rated, both inductive and resistive.
- 2-pole, 250 VAC contactors.
- 30 millisecond transfer time.
- Dual coil design.
- Rated for both copper and aluminum conductors.
- Main contacts are silver plated or silver alloy to resist welding and sticking.
- NEMA/UL 3R aluminum outdoor enclosure allows for indoor or outdoor mounting flexibility.
- Multi listed for use with 1" standard, tandem, GFCI and AFCI breakers from Siemens, Murray, Eaton and Square D for the most flexible and cost effective install.

| Model | G007036-1 (16kW) |
|---|---|
| No. of Poles | 2 |
| Current Rating (Amps) | 100 |
| Voltage Rating (VAC) | 120/240, 1Ø |
| Utility Voltage Monitor (Fixed)*<br>*-Pick-up*<br>*-Dropout* | <br>80%<br>65% |
| Return to Utility* | approx. 15 sec |
| Exercises bi-weekly for 5 minutes*† | Standard |
| UL Listed | Standard |
| Total Circuits Available | 24 |
| Tandem Breaker Capabilities | 8 tandems |
| Circuit Breaker Protected<br>Available RMS Symmetrical<br>Fault Current @ 250 Volts | <br>10,000 |

*Function of Evolution Controller
Exercise can be set to weekly or monthly

## Dimensions

| | Height | | Width | | Depth |
|---|---|---|---|---|---|
| | H1 | H2 | W1 | W2 | |
| in | 26.75 | 30.1 | 10.5 | 13.5 | 6.91 |
| mm | 679.4 | 764.3 | 266.7 | 343.0 | 175.4 |

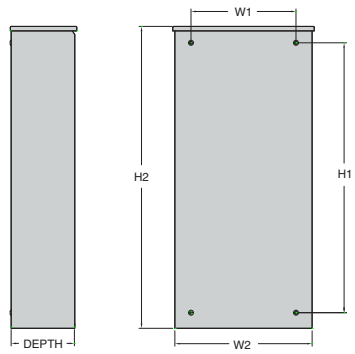


| Wire Ranges | | |
|---|---|---|
| Conductor Lug | Neutral Lug | Ground Lug |
| 1/0 - #14 | 2/0 - #14 | 2/0 - #14 |

## Service Rated Smart Switch Features

- Includes Digital Power Management Technology standard (DPM).
- Intelligently manages up to four air conditioner loads with no additional hardware.
- Up to four more large (240 VAC) loads can be managed when used in conjunction with Smart Management Modules (SMMs).
- Electrically operated, mechanically-held contacts for fast, clean connections.
- Rated for all classes of load, 100% equipment rated, both inductive and resistive.
- 2-pole, 250 VAC contactors.
- Service equipment rated, dual coil design.
- Rated for both aluminum and copper conductors.
- Main contacts are silver plated or silver alloy to resist welding and sticking.
- NEMA/UL 3R aluminum outdoor enclosure allows for indoor or outdoor mounting flexibility.

| Model | G007037-1 (16 kW)/G007039-1 (20 kW)/ G007043-2 (22 kW) |
|---|---|
| No. of Poles | 2 |
| Current Rating (Amps) | 200 |
| Voltage Rating (VAC) | 120/240, 1Ø |
| Utility Voltage Monitor (Fixed)*<br>*-Pick-up*<br>*-Dropout* | <br>80%<br>65% |
| Return to Utility* | approx. 13 sec |
| Exercises bi-weekly for 5 minutes* | Standard |
| UL Listed | Standard |
| Enclosure Type | NEMA/UL 3R |
| Circuit Breaker Protected | 22,000 |
| Lug Range | 250 MCM - #6 |

*Function of Evolution Controller
Exercise can be set to weekly or monthly

## Dimensions

| | 200 Amps 120/240, 1ø Open Transition Service Rated | | | | |
|---|---|---|---|---|---|
| | Height | | Width | | Depth |
| | H1 | H2 | W1 | W2 | |
| in | 26.75 | 30.1 | 10.5 | 13.5 | 6.91 |
| mm | 679.4 | 764.3 | 266.7 | 343.0 | 175.4 |

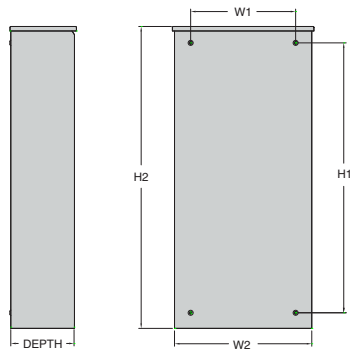

GENERAC

# 16/20/22 kW

## available accessories

| Model # | Product | Description |
|---|---|---|
| G007005-0 | Wi-Fi LP Fuel Level Monitor | The Wi-Fi enabled LP fuel level monitor provides constant monitoring of the connected LP fuel tank. Monitoring the LP tank's fuel level is an important step in making sure your generator is ready to run during an unexpected power failure. Status alerts are available through a free application to notify when your LP tank is in need of a refill. |
| G005819-0 | 26R Wet Cell Battery | Every standby generator requires a battery to start the system. Generac offers the recommended 26R wet cell battery for use with all air-cooled standby product (excluding PowerPact®). |
| G007101-0 | Battery Pad Warmer | The pad warmer rests under the battery. Recommended for use if the temperature regularly falls below 0°F. (Not necessary for use with AGM-style batteries). |
| G007102-0 | Oil Warmer | Oil warmer slips directly over the oil filter. Recommended for use if the temperature regularly falls below 0°F. |
| G007103-1 | Breather Warmer | The breather warmer is for use in extreme cold weather applications. For use with Evolution controllers only in climates where heavy icing occurs. |
| G005621-0 | Auxiliary Transfer Switch Contact Kit | The auxiliary transfer switch contact kit allows the transfer switch to lock out a single large electrical load you may not need. Not compatible with 50 amp pre-wired switches. |
| G007027-0 - Bisque | Fascia Base Wrap Kit (Standard on 22 kW) | The fascia base wrap snaps together around the bottom of the new air cooled generators. This offers a sleek, contoured appearance as well as offering protection from rodents and insects by covering the lifting holes located in the base. |
| G005703-0 - Bisque | Paint Kit | If the generator enclosure is scratched or damaged, it is important to touch-up the paint to protect from future corrosion. The paint kit includes the necessary paint to properly maintain or touch-up a generator enclosure. |
| G006485-0 | Scheduled Maintenance Kit | Generac's scheduled maintenance kits provide all the hardware necessary to perform complete routine maintenance on a Generac automatic standby generator. |
| G006873-0 | Smart Management Module (50 Amps) | Smart Management Modules are used in conjunction with the Automatic Transfer Switch to increase its power management capabilities. It provides additional power management flexibility not found in any other power management system. |

## dimensions & UPCs

Dimensions shown are approximate. Refer to installation manual for exact dimensions. DO NOT USE THESE DIMENSIONS FOR INSTALLATION PURPOSES.

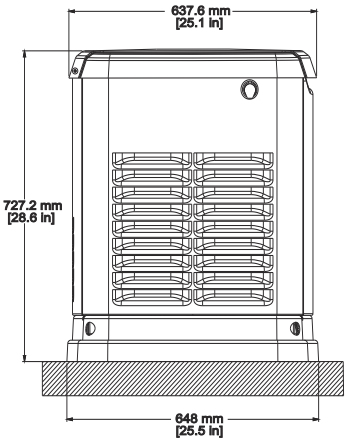


LEFT SIDE VIEW

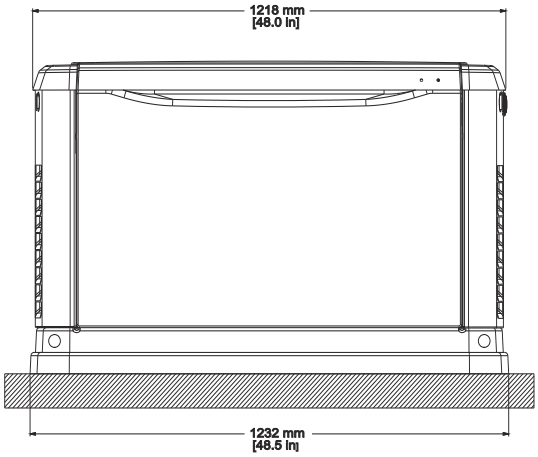


FRONT VIEW

| Model | UPC |
|---|---|
| G007035-1 | 696471074161 |
| G007036-1 | 696471074154 |
| G007037-1 | 696471074178 |
| G007038-1 | 696471074185 |
| G007039-1 | 696471074192 |
| G007042-2 | 696471074208 |
| G007043-2 | 696471074215 |



©2018 Generac Power Systems, Inc. All rights reserved. All specifications are subject to change without notice. Part No. 10000000194-G 03/16/18